Smart Sensor High precision contact type ZX-T Series

ZX-T Series

Ordering Information

Sensors

Sensor Heads

Size	Type	Sensing distance	Resolution (See note.)	Model
6 dia.	Short type	1 mm	0.1 µm	ZX-TDS01T
6 dia.	Standard type	4 mm	0.1 µm	ZX-TDS04T
6 dia.	Low measurement type	4 mm	0.1 µm	ZX-TDS04T-L

Note: The resolution refers to the minimum value that can be read when a ZX-TDA□1 Amplifier Unit is connected.

Amplifier Units

Appearance	Power supply	Output type	Model
	DC	NPN	ZX-TDA11
		PNP	ZX-TDA41

Accessories (Order Separately)

Calculating Unit

Appearance	Model
	ZX-CAL2

ZX-series Communicationys Interface Unit

Appearance	Model
	ZX-SF11

SmartMonitor Sensor Setup Tool for Personal Computer Connection

Appearance	Name	Model
	ZX-series Communications Interface Unit	ZX-SF11
+ CD-ROM	ZX-series Communications Interface Unit + ZX-series Sensor Setup Software Basic	ZX-SFW11EV3 *1, *2
CD-ROM	ZX-series Sensor Setup Software	ZX-SW11EV3 *2

Note: *1. When using the ZX-TDA11/41 with the SmartMonitor, either the ZX-SFW11EV3 or the ZX-SW11EV3 SmartMonitor must be used. Earlier versions cannot be used.
Note: *2. The ZX-SFW11EV3 SmartMonitor can be used for parameter setting, data logging and waveform monitoring.

Cables with Connectors on Both Ends (for Extension)*

Cable length	Model	Quantity
1 m	ZX-XC1A	1
4 m	ZX-XC4A	
8 m	ZX-XC8A	

Note: *Robot Cable models are also available.
The model numbers are ZX-XC□R.

Preamplifier Mounting Brackets

Appearance	Model	Remarks
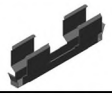	ZX-XBT1	Attached to each Sensor Head
	ZX-XBT2	For DIN track mounting

Cables with Connectors on Both Ends (for Extension)

Cable length	Model	Quantity
1 m	ZX-XC1A	1
4 m	ZX-XC4A	
8 m	ZX-XC8A	

Specifications

Sensor Heads

Item		ZX-TDS01T	ZX-TDS04T	ZX-TDS04T-L
Measurement range		1 mm	4 mm	
Maximum actuator travel distance		Approx. 1.5 mm	Approx. 5 mm	
Resolution (See note 1.)		0.1 µm		
Linearity (See note 2.)		0.3% F.S.		
Operating force (See note 3.)		Approx. 0.7 N		Approx. 0.25 N
Degree of protection (Sensor Head)		IEC60529, IP67		IEC60529, IP54
Mechanical durability		10,000,000 operations min.		
Ambient temperature		Operating: 0° C to 50° C (with no icing or condensation) Storage: -15° C to 60° C (with no icing or condensation)		
Ambient humidity		Operating and storage: 35% to 85% (with no icing or condensation)		
Temperature characteristic (See note 4.)	Sensor Head	0.03% F.S./° C		
	Preamplifier	0.01% F.S./° C		
Weight (packed state)		Approx. 100 g		
Materials	Sensor Head	Stainless steel		
	Preamplifier	Polycarbonate		
Accessories		Instruction manual, Preamplifier Mounting Brackets (ZX-XBT1)		

Note 1. The resolution is given as the minimum value that can be read when a ZX-TDA□1 Amplifier Unit is connected. This value is taken 15 minutes after turning ON the power with the average number of operations set to 256.
2. The linearity is given as the error in an ideal straight line displacement output.
3. These figures are representative values that apply for the measurement mid-point, and are for when the provided actuator is used, with the actuator moving downwards. If the actuator moves horizontally or upwards, the operating force will be reduced. Also, if an actuator other than the standard one is used, the operating force will vary with the weight of the actuator itself.
4. These figures are representative values that apply for the mid-point of the measurement range.

Amplifier Units

Item	ZX-TDA11	ZX-TDA41
Measurement period	1 ms	
Possible average count settings (See note 1.)	1, 16, 32, 64, 128, 256, 512, or 1,024	
Linear output (See note 2.)	Current output: 4 to 20 mA/F.S., Max. load resistance: 300 Ω Voltage output: ±4 V (±5 V, 1 to 5 V (See note 3.)), Output impedance: 100 Ω	
Judgement outputs (3 outputs: HIGH/PASS/LOW)	NPN open-collector outputs, 30 VDC, 30 mA max. Residual voltage: 1.2 V max.	PNP open-collector outputs, 30 VDC, 30 mA max. Residual voltage: 2 V max.
Zero reset input, timing input, reset input, judgement output hold input	ON: Short-circuited with 0-V terminal or 1.5 V or less OFF: Open (leakage current: 0.1 mA max.)	ON: Supply voltage short-circuited or supply voltage of 1.5 V or less OFF: Open (leakage current: 0.1 mA max.)
Function	- Measurement value display- Present value/set value/output value display - Display reverse- ECO mode - Number of display digit changes - Sample hold- Peak hold- Bottom hold, peak-to-peak hold - Self-peak hold - Self-bottom hold- Zero reset - Initial reset- Direct threshold value setting- Position teaching - Hysteresis width setting- Timing inputs- Reset input - Judgement output hold input - Monitor focus- (A-B) calculations (See note 4.) - (A+B) calculations (See note 4.) - Sensor disconnection detection - Zero reset memory- Function lock- Non-measurement setting - Clamp value setting- Scale inversion- Zero reset indicator - Span adjustment- Warming-up display- Pressing force alarm	
Indicators	Judgement indicators: High (orange), pass (green), low (yellow), 7-segment main digital display (red), 7-segment sub-digital display (yellow), power ON (green), zero reset (green), enable (green)	
Power supply voltage	12 to 24 VDC ±10%, Ripple (p-p): 10% max.	
Current consumption	140 mA max. (with Sensor connected), For 24-VDC power supply voltage: 140 mA max. (with Sensor connected)	
Ambient temperature	Operating and storage: 0 to 50° C (with no icing or condensation)	
Temperature characteristic	0.03% F.S./° C	
Connection method	Prewired (standard cable length: 2 m)	
Weight (packed state)	Approx. 350 g	
Materials	Case: PBT (polybutylene terephthalate), Cover: Polycarbonate	

Note 1. The response speed of the linear output is calculated as the measurement period × (average count setting + 1).
The response speed of the judgement outputs is calculated as the measurement period × (average count setting + 1).
2. The output can be switched between a current output and voltage output using a switch on the bottom of the Amplifier Unit.
3. Setting is possible via the monitor focus function.
4. A Calculating Unit (ZX-CAL2) is required.

Characteristic Data

Output Characteristics
Voltage/Current Output

ZX-TDS01T/-S04T/-S04T-L

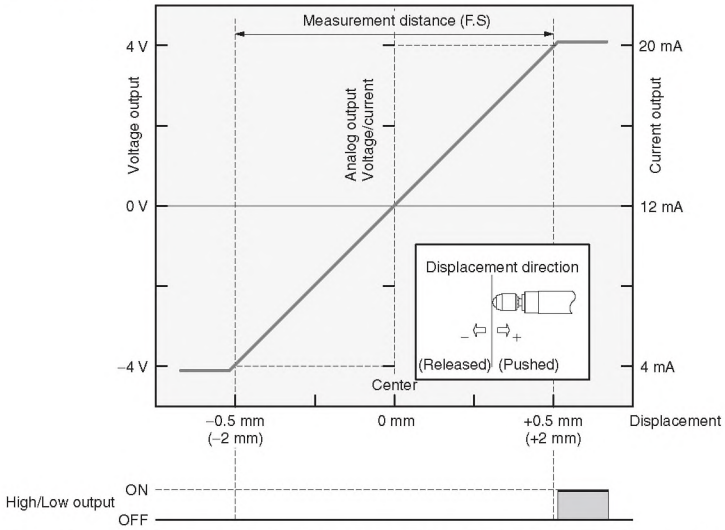

Note: To prevent destroying the Sensor Head, both the high and low judgment outputs will light if 101% of the upper limit of the measurement distance is reached.

I/O Circuit Diagrams

NPN Amplifier Unit: ZX-TDA11

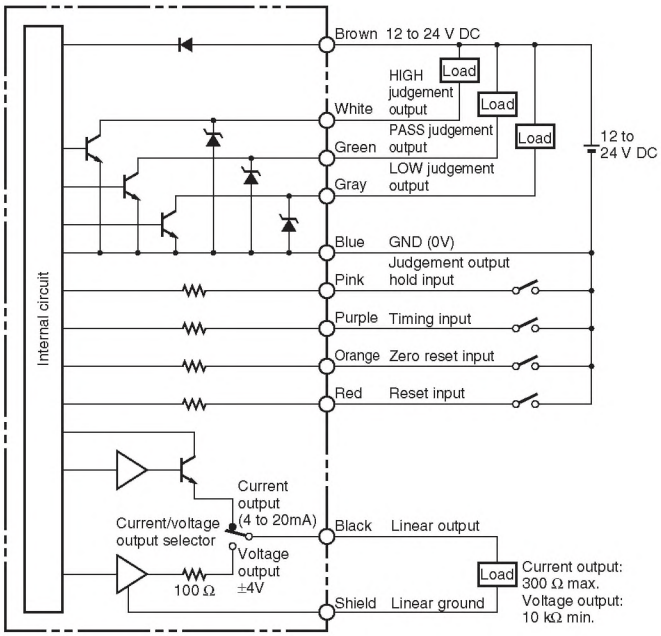

PNP Amplifier Unit: ZX-TDA41

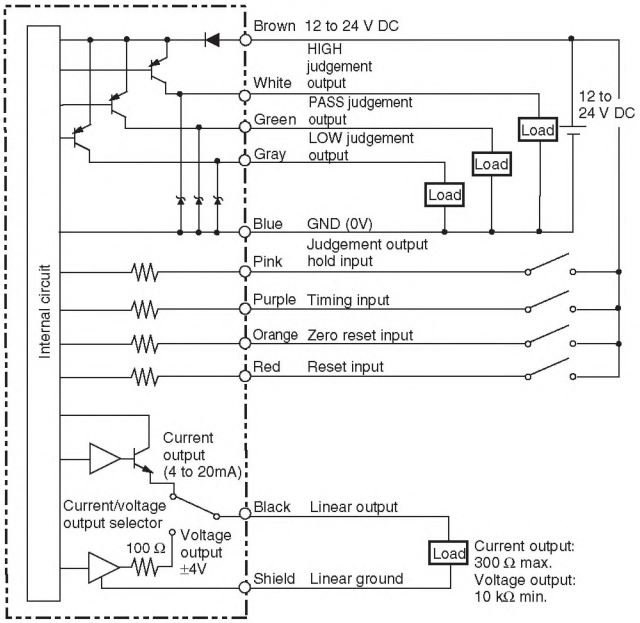

Connectors

Amplifier Unit

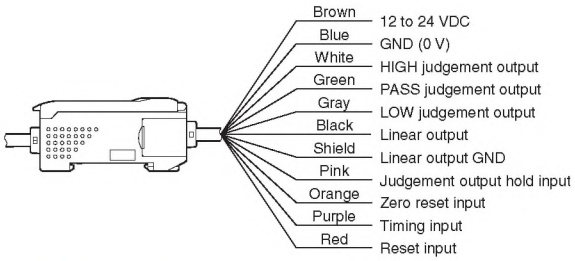

Note 1. Use a stabilized power supply separate from other devices and power systems for the Amplifier Unit, particularly when high resolution is required.

2. Always wire correctly. Incorrect wiring may damage the Unit. Use a different ground for the linear output from the normal ground.

3. The blue line (0 V) is the 0 V power supply line. The shield wire (linear output GND) is used together with the black line (linear output) to connect the linear output. Wire these lines correctly. Always ground the linear output terminal even when the linear output is not used.

Part Names

Sensor Heads

ZX-TDS01T
ZX-TDS04T
ZX-TDS04T-L

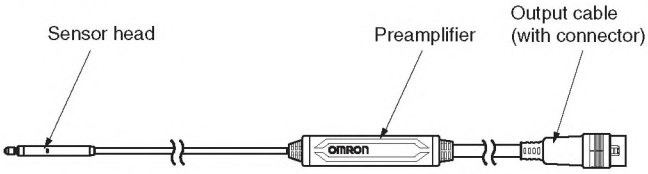

Amplifier Unit

ZX-TDA11
ZX-TDA41

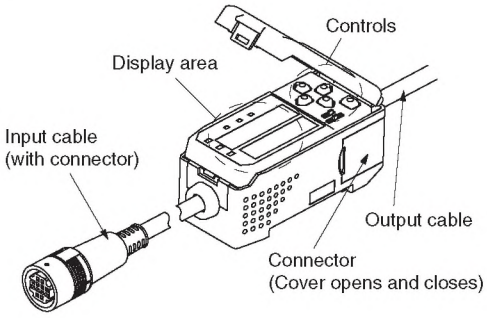

Calculating Unit

ZX-CAL2

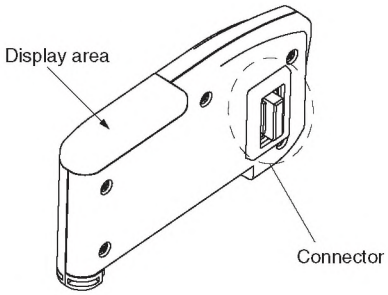

Options (Actuators)

Model		Type (material)	Screw section	Appearance	Application	Applicable Sensor (See note.) ZX-TDS□T
D5SN-	TB1	Ball type (steel)	Female screw M2.5 x 0.45		Measuring ordinary flat surfaces (standard actuator supplied with the ZX-TDS Series)	○
	TB2	Ball type (carbide steel)	Female screw M2.5 x 0.45		Measurements where abrasion resistance is critical Measured objects: Carbide (HR90) or lower.	○
	TB3	Ball type (ruby)	Female screw M2.5 x 0.45		Measurements where abrasion resistance is critical Measured objects: Carbide (HR90) or higher.	○
	TN1	Needle type (carbide steel)	Male screw M2.5 x 0.45		Measuring the bottom of grooves and holes	△
	TF1	Flat (carbide steel)	Male screw M2.5 x 0.45		Measuring spherical objects	△
	TA	Conversion Adapter (stainless steel)	Through-hole female screw M2.5 x 0.45		Mounting D5SN-TN1/-TF1 or commercially available actuators on ZX-TDS-series Sensors	○

Note: ○ Replacement possible △ Conversion Adapter required

Dimensions

D5SN-TB1/TB2/TB3

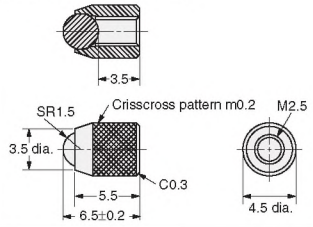

D5SN-TN1

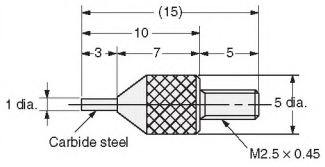

D5SN-TF1

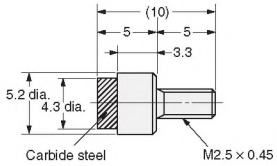

D5SN-TA

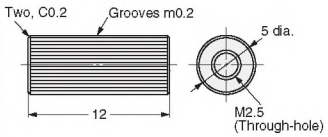

Mounting Jigs

Recommended Mounting Jigs for ZX-TDS Sensors

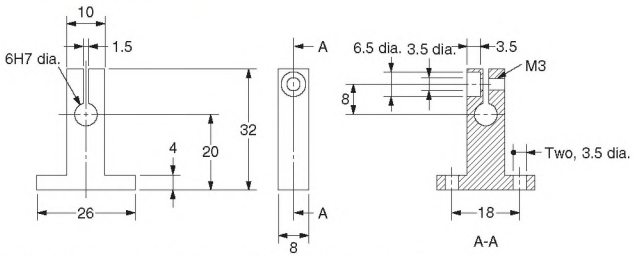

Tightening torque: 0.6 to 0.8 N·m (M3 screws)
Material: Aluminum

Mounting Jigs for an 8-diameter Stand

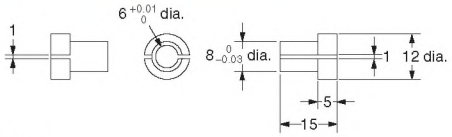

Material: Brass

Mounting with 3-point Support

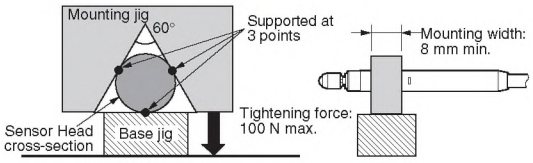

Replacing Actuators

Be careful not to damage the rubber boot with pliers or other tools when replacing the actuator.

1. Remove the standard actuator.

- Hold the plunger's D-cut section with radio pliers or a similar tool while removing the actuator.
- If the replacement must be performed by holding the Sensor Head itself, ensure that a torque exceeding 0.15 N·m is not applied. Applying excessive torque may have an adverse affect on plunger operation.

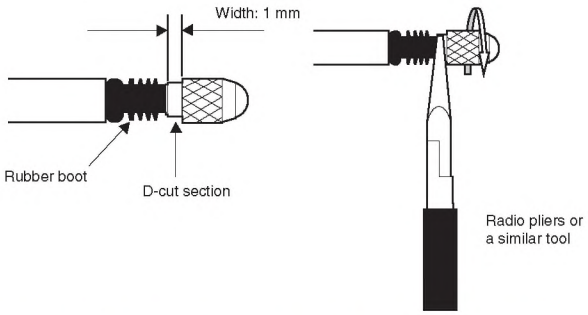

2. Mount the commercial actuator to the Conversion Adapter.

- Tighten the actuator securely, and ensure that there is no looseness.
- If necessary, apply a screw-locking agent. (Recommended: Three-Bond 1401B)

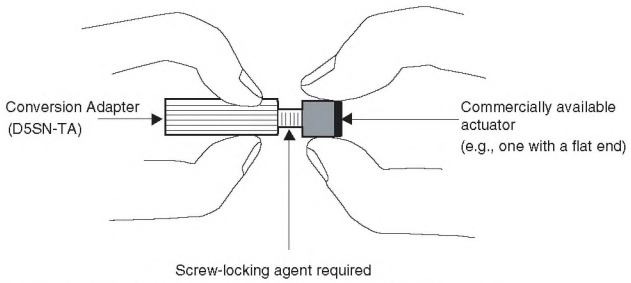

3. Mount the Conversion Adapter to the plunger.

- Hold the plunger's D-cut section with radio pliers or a similar tool while mounting and securing the Conversion Adapter.
- If the replacement must be performed by holding the Sensor Head itself, ensure that a torque exceeding 0.15 N·m is not applied. Applying excessive torque may have an adverse affect on plunger operation.

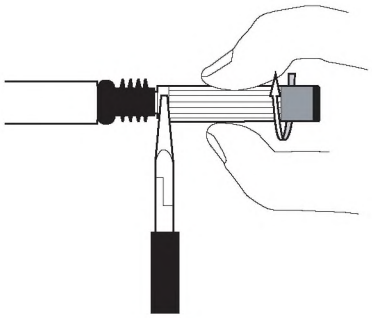

Precautions

Design Precautions

- Conform to the specified ratings and performance. Refer to *Specifications* on page B-78 for details.
- Measurements may not be possible or may not be accurate for some materials and shapes.
- The Sensor will be destroyed if the Actuator is pressed too far. Do not use the Actuator past the point where a pressing force alarm (OVER) is displayed.
- Do not remove the rubber boot. Without the rubber boot, foreign matter may enter the Sensor Head, possibly causing the Sensor Head to malfunction.
- Use suitable torque and force when mounting the Sensor. Refer to page B-81 for details.
- The Sensor may be destroyed if excessive force is applied.

Environment

- Do not operate the product in locations subject to flammable or explosive gases.
- In order to ensure safe operation and maintenance, do not install the product in the vicinity of high-voltage devices or power equipment.

Wiring

- Do not use the product at voltages exceeding the rated values. Doing so may result in damage.
- Do not connect the product to an AC power supply or connect the power supply in reverse.
- Do not short-circuit the load for open-collector output.

Correct Use

- System Design

Warming Up

After turning ON the power, allow the Smart Sensor to warm up for 15 minutes minimum prior to use.

Measurements

Do not expose the plunger to forces exceeding the limits in the following diagram. Doing so may damage the plunger.

ZX-TDS-Series Sensors

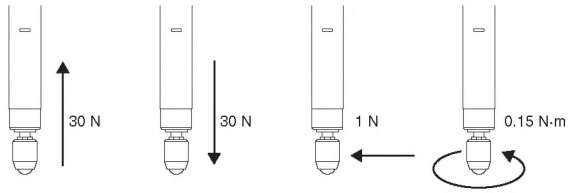

- Adjustments

Settings

When setting the threshold value with the Smart Sensor connected to an external device, turn ON the Amplifier Unit's judgement output hold input to prevent the judgement from being output to the external device.

- Compatibility

Sensors and Amplifier Units are mutually compatible. Sensors can be added or replaced individually.

- Influence of High-frequency Electromagnetic Fields

Using the product in the vicinity of devices that generate high-frequency electromagnetic fields, such as ultrasonic cleaning equipment, high-frequency generators, transceivers, mobile phones, and inverters, may result in malfunction.

Other Precautions

Do not attempt to disassemble, repair, or modify the product.

Dispose of the product using standard procedures for industrial waste.

These Sensors are not compatible with the ZX-L□□ Smart Sensors (laser type). Do not connect combinations of ZX-E□□ Smart Sensors and ZX-T□□ Smart Sensors.

Wiring

- Wiring Check

After wiring is completed, before turning ON the power, confirm that the power supply is connected correctly, that there are no faulty connections, such as load short-circuits, and that the load current is correct. Incorrect wiring may result in failure.

- Cable Extension

Do not extend the cable for the Sensor and the Amplifier Unit to a length exceeding 10 m. Use a ZX-XC□A Extension Cable (sold separately) to extend the Sensor's cable. Extend the Amplifier Unit's cable using a shielded cable of the same type.

- Power Supply

When using a commercially available switching regulator, ground the FG (frame ground) terminal.

If the power supply line is subject to surges, connect a surge absorber that meets the conditions of the operating environment.

Dimensions

Sensors

ZX-TDS01T

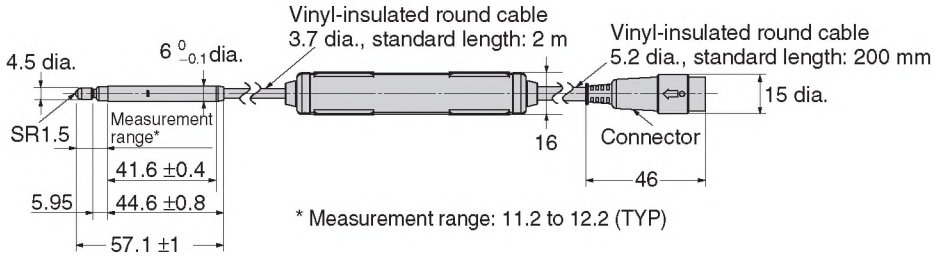

ZX-TDS04T
ZX-TDS04T-L

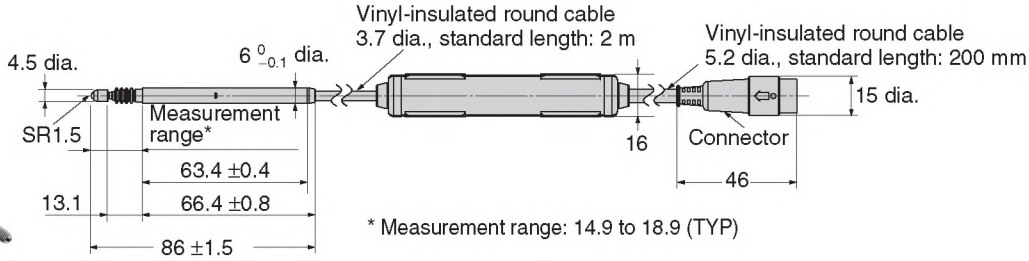

Amplifier Unit

ZX-TDA11
ZX-TDA41

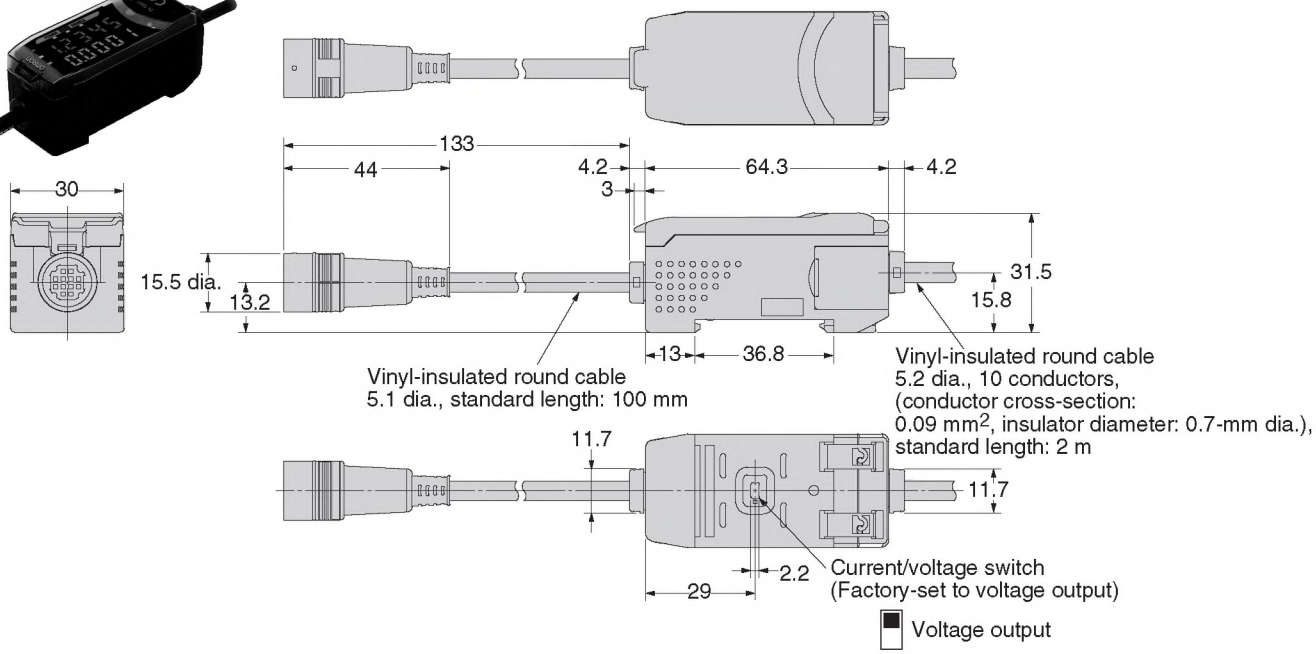

Accessories (Order Separately)

Preamplifier Mounting Bracket (Supplied with Each Sensor)

ZX-XBT1

ZX-XBT2 (For DIN Track Mounting)

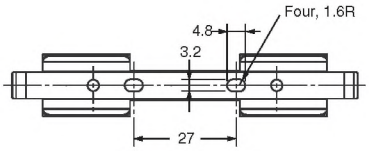

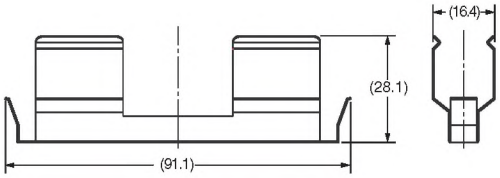

Material: Stainless steel

Mounting Hole Cutout Dimensions

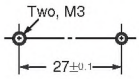

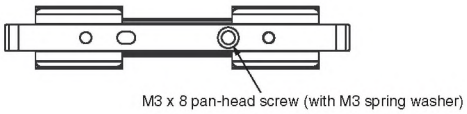

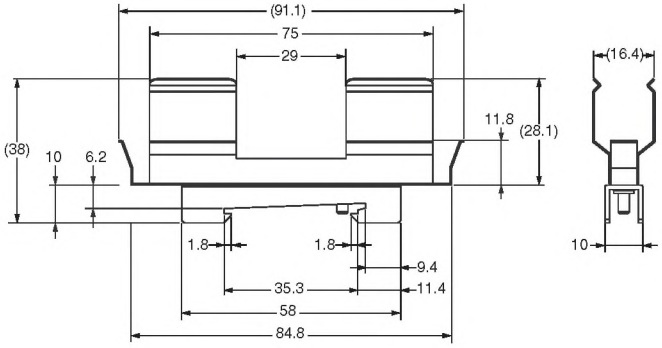

Material: Stainless steel