Smart Camera

FHV7 Series

Ultimate flexibility to fit ever-changing production scene

- Modular structure for a wide range of applications
- Responding to changes of objects like human eyes
- Raising quality standard without sacrificing cycle time

System Configuration

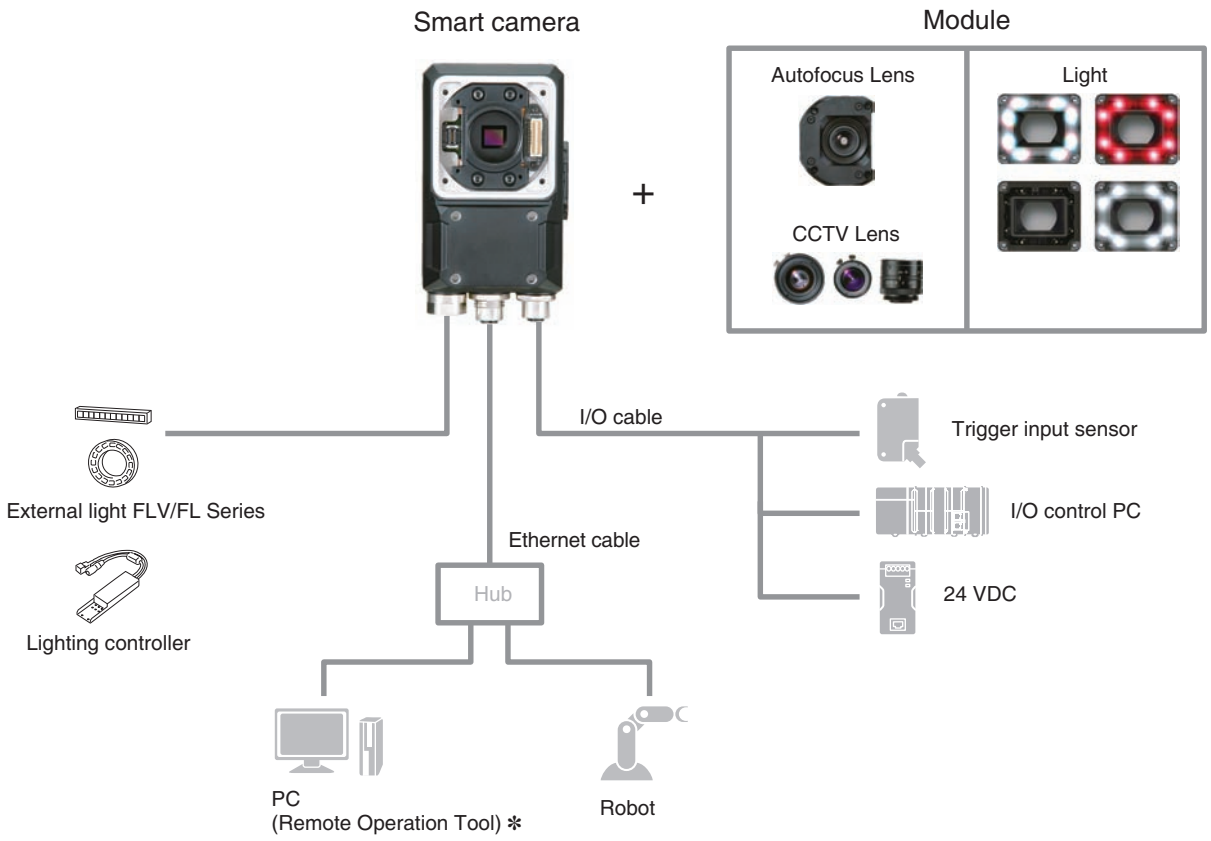

✻ After purchasing the product, you can register as a member to download this for free. For details, see the member registration sheet included with the FHV7 Smart Camera.

Model Selection

To select a model of Smart Camera, use the WEB Selector.
http://www.ia.omron.com/fhv_select_e

Note: With certain module types, the operation of some combinations cannot be guaranteed. Use the Web Selector to select the correct combination of image sensor, lens, resolution, and light.

Model Number Structure

FHV7 Series Model Number Legend

Use this legend when determining the product specifications from the model number. When ordering, use a model number from the table in *Ordering Information*.

FHV7 H-□□□□□-□□□-□□

1 2 3 4 5 6

No.	Classification	Code	Meaning
1	Image sensors	M	Monochrome
		C	Color
2	Resolution	004	0.4 million pixels
		016	1.6 million pixels
		032	3.2 million pixels
		050	5 million pixels
		063	6.3 million pixels
		120	12 million pixels
3	Shutter type	-	Global shutter
		R	Rolling shutter
4	Lens	C	C mount
		S	Autofocus Lens

No.	Classification	Code	Meaning
5	Focal length	06	6 mm
		09	9 mm
		12	12 mm
		16	16 mm
		25	25 mm
6	Light color	R	Red
		W	White
		IR	IR
		MC	Multi color

Configuration

For the Smart Camera FHV7 series, there are five configurations below by module combinations.

Smart camera		Lens	Internal lighting	Protective structure	Integrated model	Appearance	Configuration
0.4 million pixels 1.6 million pixels 3.2 million pixels 5 million pixels 6.3 million pixels 12 million pixels	FHV7H-□004-□ FHV7H-□016-□ FHV7H-□032-□ FHV7H-□050-□ FHV7H-□063R-□ FHV7H-□120R-□	C mount lens 3Z4SLE SV-□□□□V 3Z4SLE SV-□□□□H	N/A	IP40	FHV7H-□□□□□-C		C mount lens/IP40
				IP67 Waterproof Hoods required FHV-XHD-S FHV-XHD-L	N/A		C mount lens/IP67
0.4 million pixels 1.6 million pixels 3.2 million pixels 6.3 million pixels	FHV7H-□004-□ FHV7H-□016-□ FHV7H-□032-□ FHV7H-□063R-□	FHV lens module FHV-LEM-S□□	N/A	IP40	FHV7H-□□□□□-S□□		Lens module/IP40
				IP67 Waterproof Hoods required FHV-XHD-LEM	N/A		Lens module/IP67
			FHV-LTM-□□	IP67	FHV7H-□□□□□-S□□-□□		Lens module /Internal lighing - IP67

Ordering Information

Smart Cameras

C Mount Models

Item	Resolution	Model	
		Color	Monochrome
	0.4 million pixels	**FHV7H-C004-C**	**FHV7H-M004-C**
	1.6 million pixels	**FHV7H-C016-C**	**FHV7H-M016-C**
	3.2 million pixels	**FHV7H-C032-C**	**FHV7H-M032-C**
	5 million pixels	**FHV7H-C050-C**	**FHV7H-M050-C**
	6.3 million pixels	**FHV7H-C063R-C**	**FHV7H-M063R-C**
	12 million pixels	**FHV7H-C120R-C**	**FHV7H-M120R-C**

Lens Modules

Item		Focal length ✻	Model
	Autofocus Lens	6 mm	**FHV-LEM-S06**
		9 mm	**FHV-LEM-S09**
		12 mm	**FHV-LEM-S12**
		16 mm	**FHV-LEM-S16**
		25 mm	**FHV-LEM-S25**

✻ For the focal length and horizontal field of view, refer to specifications (P.27) and optical charts of the lens module (P.35).
Refer to the *Vision Accessory Catalog* (Cat No. Q198) for details on C-mount lenses.

Lighting Modules

Item	Light color	Model
	Multi color	**FHV-LTM-MC**
	Red	**FHV-LTM-R**
	White	**FHV-LTM-W**
	IR	**FHV-LTM-IR**

All-in-one Models with Lens Module

Item	Resolution	Lens	Focal length ✻	Model	
				Color	Monochrome
	0.4 million pixels	Autofocus Lens	6 mm	**FHV7H-C004-S06**	**FHV7H-M004-S06**
			9 mm	**FHV7H-C004-S09**	**FHV7H-M004-S09**
			12 mm	**FHV7H-C004-S12**	**FHV7H-M004-S12**
			16 mm	**FHV7H-C004-S16**	**FHV7H-M004-S16**
			25 mm	**FHV7H-C004-S25**	**FHV7H-M004-S25**
	1.6 million pixels	Autofocus Lens	6 mm	**FHV7H-C016-S06**	**FHV7H-M016-S06**
			9 mm	**FHV7H-C016-S09**	**FHV7H-M016-S09**
			12 mm	**FHV7H-C016-S12**	**FHV7H-M016-S12**
			16 mm	**FHV7H-C016-S16**	**FHV7H-M016-S16**
			25 mm	**FHV7H-C016-S25**	**FHV7H-M016-S25**
	3.2 million pixels	Autofocus Lens	6 mm	**FHV7H-C032-S06**	**FHV7H-M032-S06**
			9 mm	**FHV7H-C032-S09**	**FHV7H-M032-S09**
			12 mm	**FHV7H-C032-S12**	**FHV7H-M032-S12**
			16 mm	**FHV7H-C032-S16**	**FHV7H-M032-S16**
			25 mm	**FHV7H-C032-S25**	**FHV7H-M032-S25**
	6.3 million pixels	Autofocus Lens	6 mm	**FHV7H-C063R-S06**	**FHV7H-M063R-S06**
			9 mm	**FHV7H-C063R-S09**	**FHV7H-M063R-S09**
			12 mm	**FHV7H-C063R-S12**	**FHV7H-M063R-S12**
			16 mm	**FHV7H-C063R-S16**	**FHV7H-M063R-S16**
			25 mm	**FHV7H-C063R-S25**	**FHV7H-M063R-S25**

✻ For the focal length and horizontal field of view, refer to specifications (P.27) and optical charts of the lens module (P.35).

All-in-one Models with Lens and Lighting Modules

Item	Resolution	Lens	Focal length ✻	Light color	Model	
					Color	Monochrome
	0.4 million pixels	Autofocus Lens	6 mm	Multi color	**FHV7H-C004-S06-MC**	**FHV7H-M004-S06-MC**
				Red	---	**FHV7H-M004-S06-R**
				White	**FHV7H-C004-S06-W**	**FHV7H-M004-S06-W**
				IR	---	**FHV7H-M004-S06-IR**
			9 mm	Multi color	**FHV7H-C004-S09-MC**	**FHV7H-M004-S09-MC**
				Red	---	**FHV7H-M004-S09-R**
				White	**FHV7H-C004-S09-W**	**FHV7H-M004-S09-W**
				IR	---	**FHV7H-M004-S09-IR**
			12 mm	Multi color	**FHV7H-C004-S12-MC**	**FHV7H-M004-S12-MC**
				Red	---	**FHV7H-M004-S12-R**
				White	**FHV7H-C004-S12-W**	**FHV7H-M004-S12-W**
				IR	---	**FHV7H-M004-S12-IR**
			16 mm	Multi color	**FHV7H-C004-S16-MC**	**FHV7H-M004-S16-MC**
				Red	---	**FHV7H-M004-S16-R**
				White	**FHV7H-C004-S16-W**	**FHV7H-M004-S16-W**
				IR	---	**FHV7H-M004-S16-IR**
			25 mm	Multi color	**FHV7H-C004-S25-MC**	**FHV7H-M004-S25-MC**
				Red	---	**FHV7H-M004-S25-R**
				White	**FHV7H-C004-S25-W**	**FHV7H-M004-S25-W**
				IR	---	**FHV7H-M004-S25-IR**
	1.6 million pixels	Autofocus Lens	6 mm	Multi color	**FHV7H-C016-S06-MC**	**FHV7H-M016-S06-MC**
				Red	---	**FHV7H-M016-S06-R**
				White	**FHV7H-C016-S06-W**	**FHV7H-M016-S06-W**
				IR	---	**FHV7H-M016-S06-IR**
			9 mm	Multi color	**FHV7H-C016-S09-MC**	**FHV7H-M016-S09-MC**
				Red	---	**FHV7H-M016-S09-R**
				White	**FHV7H-C016-S09-W**	**FHV7H-M016-S09-W**
				IR	---	**FHV7H-M016-S09-IR**
			12 mm	Multi color	**FHV7H-C016-S12-MC**	**FHV7H-M016-S12-MC**
				Red	---	**FHV7H-M016-S12-R**
				White	**FHV7H-C016-S12-W**	**FHV7H-M016-S12-W**
				IR	---	**FHV7H-M016-S12-IR**

Item	Resolution	Lens	Focal length ✻	Light color	Model	
					Color	Monochrome
	1.6 million pixels	Autofocus Lens	16 mm	Multi color	**FHV7H-C016-S16-MC**	**FHV7H-M016-S16-MC**
				Red	---	**FHV7H-M016-S16-R**
				White	**FHV7H-C016-S16-W**	**FHV7H-M016-S16-W**
				IR	---	**FHV7H-M016-S16-IR**
			25 mm	Multi color	**FHV7H-C016-S25-MC**	**FHV7H-M016-S25-MC**
				Red	---	**FHV7H-M016-S25-R**
				White	**FHV7H-C016-S25-W**	**FHV7H-M016-S25-W**
				IR	---	**FHV7H-M016-S25-IR**
	3.2 million pixels	Autofocus Lens	6 mm	Multi color	**FHV7H-C032-S06-MC**	**FHV7H-M032-S06-MC**
				Red	---	**FHV7H-M032-S06-R**
				White	**FHV7H-C032-S06-W**	**FHV7H-M032-S06-W**
				IR	---	**FHV7H-M032-S06-IR**
			9 mm	Multi color	**FHV7H-C032-S09-MC**	**FHV7H-M032-S09-MC**
				Red	---	**FHV7H-M032-S09-R**
				White	**FHV7H-C032-S09-W**	**FHV7H-M032-S09-W**
				IR	---	**FHV7H-M032-S09-IR**
			12 mm	Multi color	**FHV7H-C032-S12-MC**	**FHV7H-M032-S12-MC**
				Red	---	**FHV7H-M032-S12-R**
				White	**FHV7H-C032-S12-W**	**FHV7H-M032-S12-W**
				IR	---	**FHV7H-M032-S12-IR**
			16 mm	Multi color	**FHV7H-C032-S16-MC**	**FHV7H-M032-S16-MC**
				Red	---	**FHV7H-M032-S16-R**
				White	**FHV7H-C032-S16-W**	**FHV7H-M032-S16-W**
				IR	---	**FHV7H-M032-S16-IR**
			25 mm	Multi color	**FHV7H-C032-S25-MC**	**FHV7H-M032-S25-MC**
				Red	---	**FHV7H-M032-S25-R**
				White	**FHV7H-C032-S25-W**	**FHV7H-M032-S25-W**
				IR	---	**FHV7H-M032-S25-IR**
	6.3 million pixels	Autofocus Lens	6 mm	Multi color	**FHV7H-C063R-S06-MC**	**FHV7H-M063R-S06-MC**
				Red	---	**FHV7H-M063R-S06-R**
				White	**FHV7H-C063R-S06-W**	**FHV7H-M063R-S06-W**
				IR	---	**FHV7H-M063R-S06-IR**
			9 mm	Multi color	**FHV7H-C063R-S09-MC**	**FHV7H-M063R-S09-MC**
				Red	---	**FHV7H-M063R-S09-R**
				White	**FHV7H-C063R-S09-W**	**FHV7H-M063R-S09-W**
				IR	---	**FHV7H-M063R-S09-IR**
			12 mm	Multi color	**FHV7H-C063R-S12-MC**	**FHV7H-M063R-S12-MC**
				Red	---	**FHV7H-M063R-S12-R**
				White	**FHV7H-C063R-S12-W**	**FHV7H-M063R-S12-W**
				IR	---	**FHV7H-M063R-S12-IR**
			16 mm	Multi color	**FHV7H-C063R-S16-MC**	**FHV7H-M063R-S16-MC**
				Red	---	**FHV7H-M063R-S16-R**
				White	**FHV7H-C063R-S16-W**	**FHV7H-M063R-S16-W**
				IR	---	**FHV7H-M063R-S16-IR**
			25 mm	Multi color	**FHV7H-C063R-S25-MC**	**FHV7H-M063R-S25-MC**
				Red	---	**FHV7H-M063R-S25-R**
				White	**FHV7H-C063R-S25-W**	**FHV7H-M063R-S25-W**
				IR	---	**FHV7H-M063R-S25-IR**

✻For the focal length and horizontal field of view, refer to specifications (P.27) and optical charts of the lens module (P.35).

Optical Filters

tem			Model
	Polarized Light Filter	For visible light	**FHV-XPL**
	Polarized Light Filter	For both infrared light and visible light	**FHV-XPL-IR**
	Diffusion Filter		**FHV-XDF**

Waterproof Hoods

Required to ensure IP67 protection without using a lighting module.

Item		Model
	Waterproof Hood for Lens Modules	**FHV-XHD-LEM**
	Waterproof Hood for C-mount Lens (Short) ✻1	**FHV-XHD-S**
	Waterproof Hood for C-mount Lens (Long) ✻2	**FHV-XHD-L**

✻1. Can be used with the following lenses.
3Z4S-LE SV-0614V, 3Z4S-LE SV-0813V, 3Z4S-LE SV-1214V, 3Z4S-LE SV-1614V, 3Z4S-LE SV-2514V
✻2. Can be used with the following lenses.
3Z4S-LE SV-0614H, 3Z4S-LE SV-0814H, 3Z4S-LE SV-1214H, 3Z4S-LE SV-1614H,
3Z4S-LE SV-2514H, 3Z4S-LE SV-3514H, 3Z4S-LE SV-5014H

Cables

Item		Cable length	Model
	I/O Cable (Bend Resistant)	2 m	**FHV-VDB 2M**
		3 m	**FHV-VDB 3M**
		5 m	**FHV-VDB 5M**
		10 m	**FHV-VDB 10M**
		20 m	**FHV-VDB 20M**
	I/O Cable (Bend Resistant, Right-angle)	2 m	**FHV-VDLB 2M**
		3 m	**FHV-VDLB 3M**
		5 m	**FHV-VDLB 5M**
		10 m	**FHV-VDLB 10M**
		20 m	**FHV-VDLB 20M**
	Ethernet Cable (Bend Resistant)	2 m	**FHV-VNB 2M**
		3 m	**FHV-VNB 3M**
		5 m	**FHV-VNB 5M**
		10 m	**FHV-VNB 10M**
		20 m	**FHV-VNB 20M**
	Ethernet Cable (Bend Resistant, Right-angle)	2 m	**FHV-VNLB 2M**
		3 m	**FHV-VNLB 3M**
		5 m	**FHV-VNLB 5M**
		10 m	**FHV-VNLB 10M**
		20 m	**FHV-VNLB 20M**

Accessories

Item			Model
	Base Mount for Smart Cameras and Lighting Controllers		**FHV-XMT-7**
	Base Mount for Lighting Controllers		**FHV-XMT-7-TCC**
	Light Cover (for replacement) ✻1		**FHV-XCV**
	Waterproof Cap (for replacement)	for Ethernet Connecter	**FHV-XWC-ECN**
		for Light Connecter	**FHV-XWC-LCN**
	Waterproof Packing ✻2 (for replacement, 5 pcs)	for Camera	**FHV-XWP-CAM**
		for Lighting Module	**FHV-XWP-LTM**
		for Waterproof Hood	**FHV-XWP-HD-SL**
	Light-shielding for Lighting Module (for replacement, 3 pcs) ✻2		**FHV-XLS-LTM**
	Facing cover for Lens Modules (for replacement, cover 1pcs, screws 5 pcs (including one spare piece))		**FHV-XFC-LEM-S**
	Facing cover for C-mount Lens (for replacement, cover 1pcs, screws 5 pcs (including one spare piece))		**FHV-XFC-C**
---	Screw for microSD card cover (for replacement, 10 pcs)		**FHV-XSCR-MSD**

✻1. Adapted lighting module
FHV-LTM-W, FHV-LTM-R, FHV-LTM-IR, FHV-LTM-MC
✻2. Always replace when a module is removed.

Accessories

Item	Descriptions				Model
–	External Lights		External lighting controller	LED	**FLV Series**
				High-brightness LED	**FL-BR/DR Series**
	Industrial Switching Hubs for EtherNet/IP and Ether-net	3 port	Failure detection: None	Current consumption: 0.08 A	**W4S1-03B**
		5 port	Failure detection: None	Current consumption: 0.12 A	**W4S1-05B**
		5 port	Failure detection: Supported		**W4S1-05C**

Lenses

Refer to the *Vision Accessory Catalog* (Cat. No. Q198) for details.

Resolution	Camera Model	Size of image element	Recommended lens		
			Standard Lens	Telecentric Lens	Vibrations and Shocks Resistant Lens
0.4 million-pixel	FHV7H-□004	1/2.9” equivalent	SV-V Series	VS-TCH Series	VS-MCA Series Non-telecentric Macro VS-MC Series
1.6 million-pixel	FHV7H-□016	1/2.9” equivalent			
3.2 million-pixel	FHV7H-□032	1/1.8” equivalent	SV-H Series		
5 million-pixel	FHV7H-□060	2/3” equivalent			
6.3 million-pixel	FHV7H-□063R	1/1.8” equivalent			
12 million-pixel	FHV7H-□120R	1/1.7” equivalent			

Ratings and Specifications

Smart Camera

Item			Model	FHV7H-M004-C	FHV7H-C004-C	FHV7H-M016-C	FHV7H-C016-C	FHV7H-M032-C	FHV7H-C032-C	FHV7H-M050-C	FHV7H-C050-C	FHV7H-M063R-C	FHV7H-C063R-C	FHV7H-M120R-C	FHV7H-C120R-C
Specifications	Operation Mode	Standard		Yes											
		Double speed multi-input		Yes											
		Non-stop adjustment mode		Yes											
	Parallel processing			Yes											
	Possible No. of captured images			256		64		36		25		19		10	
	Possible No. of logging images to Smart Camera			214		52		25		15		12		5	
	Possible No. of scenes			128 ✻1											
	UI operation			Remote Operation Tool											
	Setup			Create the processing flow using Flow editing.											
	Language			Japanese, English, Simplified Chinese, Traditional Chinese, German, French, Italian, Spanish, Korean, Vietnamese, Polish											
Imaging	CMOS Image elements			1/2.9-inch equivalent		1/2.9-inch equivalent		1/1.8-inch equivalent		2/3-inch equivalent		1/1.8-inch equivalent		1/1.7-inch equivalent	
	Color/Monochrome			Monochrome	Color	Monochrome	Color	Monochrome	Color	Monochrome	Color	Monochrome	Color	Monochrome	Color
	Effective pixels (H x V)			720 × 540		1440 × 1080		2048 × 1536		2448 × 2048		3072 × 2048		4000 × 3000	
	Pixel size			6.9 × 6.9 μm		3.45 × 3.45 μm		3.45 × 3.45 μm		3.45 × 3.45 μm		2.4 × 2.4 μm		1.85 × 1.85 μm	
	Imaging area H × V (opposing corner)			5.0 × 3.8 (6.3 mm)		5.0 × 3.8 (6.3 mm)		7.1 × 5.3 (8.9 mm)		8.5 × 7.1 (11.1 mm)		7.4 × 5.0 (8.9 mm)		7.4 × 5.6 (9.3 mm)	
	Shutter system			Global Shutter								Rolling shutter (Global reset mode compatible)			
	Shutter function			Electronic shutter: Shutter speed can be set from 1 μs to 100 ms.								Electronic shutter: Shutter speed can be set from 55 μs to 100 ms.		Electronic shutter: Shutter speed can be set from 84 μs to 100 ms.	
	Partial function			4 to 540 lines (4-line increments)		4 to 1080 lines (4-line increments)		4 to 1536 lines (4-line increments)		4 to 2048 lines (4-line increments)		4 to 2048 lines (4-line increments)		4 to 3000 lines (4-line increments)	
	Frame rate (image acquisition time)			430 fps (2.3 ms)		224 fps (4.5 ms)		55 fps (18.0 ms)		35 fps (28.0 ms)		59 fps (16.7 ms)		19 fps (25.0 ms)	
	Lens mounting			C mount											
	Field of view, Installation distance			Selecting a lens according to the field of view and installation distance											
External Interface	Serial			RS-232C × 1											
	Ethernet			Protocol: Non-procedure (TCP/UDP) I/F: 1000BASE-T × 1											
	EtherNet/IP			Yes (Target/Ethernet port)											
	PROFINET			Yes (Slave/Ethernet port), Conformance class A											
	Parallel I/O			NPN/PNP common											
	Parallel I/F			High-speed input: 1, General input: 3, High-speed output: 1, General output: 4											
	Encoder I/F			N/A											
	Monitor I/F			N/A											
	USB I/F			N/A											
	SD Card I/F			microSD card: SDHC × 1											
Indicator Lamps		Main		PWR: Green, RUN: Green, LINK: Yellow, BUSY: Green, OR: Yellow, ERR: Red											
		SD		SD ACCESS: Yellow											
Supply Voltage				21.6 VDC to 26.4 VDC (When an I/O cable with 20 m is connected, it is 24.0 VDC to 26.4 VDC.)											
Current Consumption				With lighting modules: 4.2 A Without lighting modules: 0.60 A											

✻1. The number of scenes can be increased up to 1,024 with the Conversion scene group data tool.

Item		Model	FHV7H-M004-C	FHV7H-C004-C	FHV7H-M016-C	FHV7H-C016-C	FHV7H-M032-C	FHV7H-C032-C	FHV7H-M050-C	FHV7H-C050-C	FHV7H-M063R-C	FHV7H-C063R-C	FHV7H-M120R-C	FHV7H-C120R-C
Usage Environment	Ambient temperature range		Operating: 0 to +40°C, Storage: -25 to +65°C (with no icing or condensation)											
	Ambient humidity range		Operating & Storage: 35 to 85%RH (With no condensation)											
	Ambient atmosphere		No corrosive gases											
	Vibration tolerance		Oscillation frequency: 10 to 150Hz, Half amplitude: 0.35 mm, Vibration direction: X/Y/Z, Sweep time: 8 minute/count, Sweep count: 10 With lens modules: Half amplitude: 0.15 mm (Others are the same as above.)											
	Shock resistance		Impact force: 150 m/s^2, Test direction: 6 directions, three time each (up/down, front/behind, left/right)											
	Noise immunity		Fast transient burst • DC power Direct infusion: 2kV, Pulse rising: 5 ns, Pulse width: 50 ns, Burst continuation time: 15 ms/0.75 ms, Period: 300 ms, Application time: 1 min. • I/O line Direct infusion: 1kV, Pulse rising: 5 ns, Pulse width: 50 ns, Burst continuation time: 15 ms/0.75 ms, Period: 300 ms, Application time: 1 min.											
	Grounding		Class D grounding (100 Ω or less grounding resistance) ✻2											
External shape	Dimensions		110 mm × 68.5 mm × 55.5 mm (H × W × D)											
	Weight		Approx. 670 g											
	Degree of protection		With lighting modules or waterproof hoods: IEC60529 - IP67 (except a connector cap removed) Other than the above: IEC60529 - IP40											
	Case material		Aluminum die-casting (ADC12)											
Accessories			• Connector cap for Ethernet cable (mounted on the body): 1 • Connector cap for an external lighting (mounted on the body): 1 • C mount cap (mounted on the body): 1 • C mount cover (mounted on the body): 1 • Instruction sheet: 1 • Membership registration: 1 • Compliance sheet: 1											

✻2. Existing the third class grounding

Lens Modules

Item		FHV-LEMS06	FHV-LEMS09	FHV-LEMS12	FHV-LEMS16	FHV-LEMS25
Focal length range ✻1		59 to 1,000 mm	60 to 1,000 mm	60 to 1,000 mm	110 to 2,000 mm	188 to 2,000 mm
Horizontal field of view range ✻1	0.4 million pixels	39 × 29 to 845 × 624 mm	24 × 18 to 543 × 407 mm	17 × 13 to 407 × 305 mm	27 × 20 to 614 × 461 mm	30 × 23 to 391 × 293 mm
	1.6 million pixels					
	3.2 million pixels	57 × 42 to 1,234 × 905 mm	34 × 25 to 772 × 579 mm	24 × 18 to 579 × 434 mm	38 × 29 to 874 × 655 mm	43 × 33 to 556 × 417 mm
	6.3 million pixels	60 × 39 to 1,293 × 836 mm	35 × 23 to 807 × 538 mm	25 × 17 to 606 × 404 mm	40 × 27 to 913 × 608 mm	45 × 30 to 581 × 387 mm
Focal length		6 mm	9 mm	12 mm	16 mm	25 mm
Usage environment	Ambient temperature range	Operating: 0 to +40°C, Storage: -25 to +65°C (with no icing or condensation)				
	Ambient humidity range	Operating & Storage: 35 to 85%RH (With no condensation)				
	Ambient atmosphere	No corrosive gases				
	Vibration tolerance	Oscillation frequency: 10 to 150Hz, Half amplitude: 0.15 mm ✻2, Vibration direction: X/Y/Z, Sweep time: 8 minute/count, Sweep count: 10				
	Shock resistance	Impact force: 150 m/s^2, Test direction: 6 directions, three time each (up/down, front/behind, left/right)				
External shape	Dimension	50 mm × 41 mm × 31 mm (H × W × D)				
	Weight	Approx. 50 g				
	Case material	Polycarbonate				
Accessories		• Special cover for FHV-LEM-S: 1 • Screws: M3 × 8 mm: 5 (including one spare piece) • Instruction sheet : 1 • Compliance sheet: 1				

✻1. Refer to optical chart (P.35) for details.
✻2. When the lens module is mounted to the product, the vibration tolerance is applied for the specifications of the smart camera.

Lighting Modules

Model		FHV-LTM-W	FHV-LTM-R	FHV-LTM-IR	FHV-LTM-MC
Color		White	Red	Infrared light	Multi color
Peak wave length		-	Typ. 630 nm	Typ. 850 nm	R: Typ. 630 nm G: Typ. 525 nm B: Typ. 465 nm IR: Typ. 850 nm
Light source		LED	LED	LED	LED
Risk group		Group 2	Group 1	Group 1	R: Group 1 G: Group 2 B: Group 2 IR: Group 1
Usage environment	Ambient temperature range	Operating: 0 to +40°C, Storage: -25 to +65°C (with no icing or condensation)			
	Ambient humidity range	Operating & Storage: 35 to 85%RH (With no condensation)			
	Ambient atmosphere	No corrosive gases			
	Vibration tolerance	Oscillation frequency: 10 to 150Hz, Half amplitude: 0.35 mm, Vibration direction: X/Y/Z, Sweep time: 8 minute/count, Sweep count: 10			
	Shock resistance	Impact force: 150 m/s^2, Test direction: 6 directions, three time each (up/down, front/behind, left/right)			
Dimensions		52 mm × 91 mm × 77 mm (H × W × D)			
Weight		270 g	270 g	270 g	270 g
Material		Aluminum die-casting (ADC12), polycarbonate			
Accessories		• Waterproof packing (small) FHV-XWP-CAM:1 • Waterproof packing (large) FHV-XWP-LTM: 1 • Light shielding sheet FHV-XLS-LTM: 1 • Lighting cover FHV-XCV: 1 • Hexagonal wrench (length: 60 mm): 1 • Instruction sheet: 1 • Compliance sheet: 1			

Optical Filters

Model		FHV-XDF	FHV-XPL	FHV-XPL-IR
Filter type		Diffusion filter	Polarization filter	Polarization filter
Wavelength		Visible to infrared	Visible	Visible to infrared
Adapted lighting module		FHV-LTM-W FHV-LTM-R FHV-LTM-IR FHV-LTM-MC	FHV-LTM-W FHV-LTM-R FHV-LTM-MC (Infrared light is not used.)	FHV-LTM-W FHV-LTM-R FHV-LTM-IR FHV-LTM-MC
Usage environment	Ambient temperature range	Operating: 0 to +40°C, Storage: -25 to +65°C (with no icing or condensation)		
	Ambient humidity range	Operating & Storage: 35 to 85%RH (With no condensation)		
	Vibration tolerance	No corrosive gases		
	Shock resistance	Oscillation frequency: 10 to 150Hz, Half amplitude: 0.35 mm, Vibration direction: X/Y/Z, Sweep time: 8 minute/count, Sweep count: 10		
	Vibration tolerance	Impact force: 150 m/s^2, Test direction: 6 directions, three time each (up/down, front/behind, left/right)		
Material		Aluminum (A6061), polycarbonate		
Weight		Approx. 70 g	Approx. 70 g	Approx. 70 g

Waterproof Hoods

Model		FHV-XHD-S	FHV-XHD-L	FHV-XHD-LEM
Suitable lens		3Z4S-LE SV-V series SV-0614V SV-0813V SV-1214V SV-1614V SV-2514V	3Z4S-LE SV-H series SV-0614H ✻1 SV-0814H ✻2 SV-1214H SV-1614H SV-2514H SV-3514H SV-5014H	FHV-LEM-S series FHV-LEM-S06 FHV-LEM-S09 FHV-LEM-S12 FHV-LEM-S16 FHV-LEM-S25
Usage environment	Ambient temperature range	Operating: 0 to +40°C, Storage: -25 to +65°C (with no icing or condensation)		
	Ambient humidity range	Operating & Storage: 35 to 85%RH (With no condensation)		
	Ambient atmosphere	No corrosive gases		
	Vibration tolerance	Oscillation frequency: 10 to 150Hz, Half amplitude: 0.35 mm, Vibration direction: X/Y/Z, Sweep time: 8 minute/count, Sweep count: 10		
	Shock resistance	Impact force: 150 m/s^2, Test direction: 6 directions, three time each (up/down, front/behind, left/right)		
Material		Aluminum (A6061), polycarbonate		
Weight		Approx. 220 g	Approx. 220 g	Approx. 220 g

✻1. This is not available in FHV7H-□050, FHV7H-□063R, FHV7H-□120R.
✻2. This is not available in FHV7H-□050.

I/O cables

Item		FHV-VDB 2M		FHV-VDB 3M		FHV-VDB 5M		FHV-VDB 10M		FHV-VDB 20M	
Cable length		2 m		3 m		5 m		10 m		20 m	
Cable type		Bending resistance cable									
Connector type		Straight connector	Rightangle connector	Straight connector	Rightangle connector	Straight connector	Rightangle connector	Straight connector	Rightangle connector	Straight connector	Rightangle connector
Size	Power line	AWG21									
	Others	AWG26									
Outer diameter		9.0±0.3 mm dia.									
Min. bending radius		Fixed use: 54 mm, Sliding use: 72 mm									
Usage environment	Ambient temperature range	Operating: -30 to +80°C, Storage: -30 to +100°C (with no icing or condensation)									
	Ambient humidity range	Operating & Storage: 0 to 93%RH (With no condensation)									
	Ambient atmosphere	No corrosive gases									
	Vibration tolerance	Oscillation frequency: 10 to 150 Hz, Half amplitude: 0.35 mm, Vibration direction: X/Y/Z, Sweep time: 8 minute/count, Sweep count: 10									
	Shock resistance	Impact force: 150 m/s^2, Test direction: 6 directions, three time each (up/down, front/behind, left/right)									
Material		Mold part: Nylon, Thermoplastic polyurethane, Sheath part: PVC									
Weight		Approx. 270 g		Approx. 390 g		Approx. 620 g		Approx. 1200 g		Approx. 2350 g	

Ethernet Cables

Item		FHV-VNB 2M		FHV-VNB 3M		FHV-VNB 5M		FHV-VNB 10M		FHV-VNB 20M	
Cable length		2 m		3 m		5 m		10 m		20 m	
Cable type		Bending resistance cable									
Connector type		Straight connector	Rightangle connector	Straight connector	Rightangle connector	Straight connector	Rightangle connector	Straight connector	Rightangle connector	Straight connector	Rightangle connector
Outer diameter		7.2+0.3 mm dia.									
Min. bending radius		Fixed use: 35 mm, Sliding use: 70 mm									
Usage environment	Ambient temperature range	Operating: -40 to +80°C, Storage: -40 to +100°C (with no icing or condensation)									
	Ambient humidity range	Operating & Storage: 0 to 93%RH (With no condensation)									
	Ambient atmosphere	No corrosive gases									
	Vibration tolerance	Oscillation frequency: 10 to 150 Hz, Half amplitude: 0.35 mm, Vibration direction: X/Y/Z, Sweep time: 8 minute/count, Sweep count: 10									
	Shock resistance	Impact force: 150 m/s^2, Test direction: 6 directions, three time each (up/down, front/behind, left/right)									
Material		Mold part: Nylon, Thermoplastic polyurethane, Sheath part: Polyurethane									
Weight		Approx. 210 g		Approx. 240 g		Approx. 310 g		Approx. 380 g		Approx. 730 g	

Parts and Names

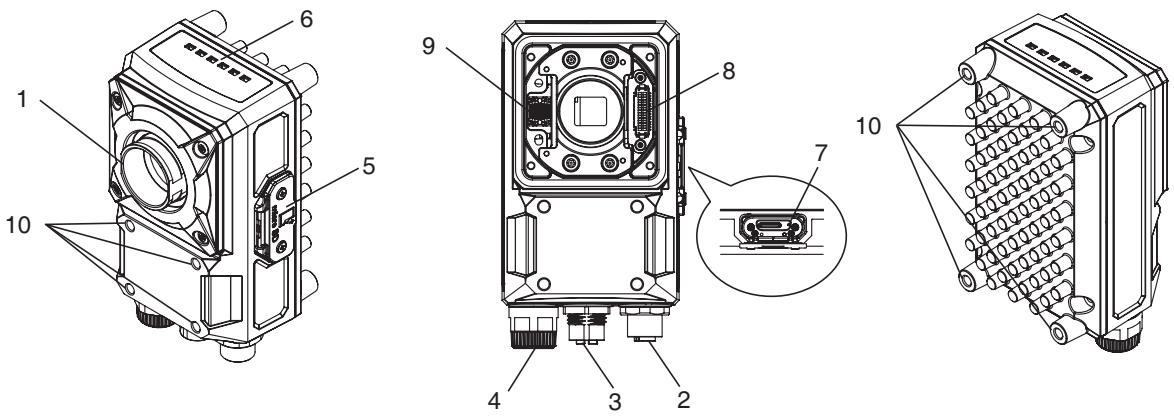

No.	Name		Description
1	Imaging unit		Captures images.
2	Connector for I/O cable		Use this connector when connecting the smart camera with a power supply or an external device using an I/O cable. Dedicated I/O cable: FHV-VD□□
3	Connector for Ethernet cable		Use this connector when connecting the smart camera with a personal computer and so on using an Ethernet cable. Dedicated Ethernet cable: FHV-VN□□
4	Connector for external lighting		Use this connector when connecting an external lighting and the external lighting controller. Connectable external lighting controller: FL-TCC□ and FLVTCC□
5	Connector to attach microSD card		Use this connector to attach a microSD card. Do not extract/insert the microSD card during processing. Otherwise, measurement time may be influenced or data may be broken.
6	Operation indicator	PWR (Green)	Lights while power is supplied.
		RUN (Green)	Lights when switching to the layout in which the RUN signal output is set ON.
		LINK (Yellow)	Lights when connected with Ethernet equipment and blinks during communication.
		BUSY (Green)	Lights while processing is in progress.
		OR (Yellow)	Lights when the overall judgment output signal is ON.
		ERR (Red)	Lights when an error occurs.
7		SD ACCESS (Yellow)	Lights when accessing to the microSD card.
8	Connector for lighting module (White)		Use this connector when mounting the lighting module.
9	Connector for lens module (Black)		Use this connector when mounting the lens module.
10	Mounting screw holes		Use them to screw up the smart camera. Recommended tightening torque: 2.3N·m

Processing Items

Group	Icon	Processing Item	
Measurement		Search	Used to identify the shapes and calculate the position of measurement objects.
		Flexible Search	Recognizing the shapes of workpieces with variation and detecting their positions.
		Sensitive Search	Search a small difference by dividing the search model in detail, and calculating the correlation.
		Shape Search Ⅲ	Robust detection of positions is possible at high-speed and with high precision incorporating environmental fluctuations, such as differences in individual shapes of the workpieces, pose fluctuations, noise superimposition and shielding.
		Classification	Used when various kinds of products on the assembly line need to be sorted and identified.
		Edge Position	Measure position of measurement objects according to the color change in measurement area.
		Edge Pitch	Detect edges by color change in measurement area. Used for calculating number of pins of IC and connectors.
		Scan Edge Position	Measure peak/bottom edge position of workpieces according to the color change in separated measurement area.
		Scan Edge Width	Measure max/min/average width of workpieces according to the color change in separated measurement area.
		Circular Scan Edge Position	Measure center axis, diameter and radius of circular workpieces.
		Circular Scan Edge Width	Measure center axis, width and thickness of ring workpieces.
		Intersection	Calculate approximate lines from the edge information on two sides of a square workpiece to measure the angle formed at the intersection of the two lines.
		Color Data	Used for detecting presence and mixed varieties of products by using color average and deviation.
		Gravity and Area	Used to measure area, center of gravity of workpices by extracting the color to be measured.
		Labeling	Used to measure number, area and gravity of workpieces by extracting registered color.
		Precise Defect	Check the defect on the object. Parameters for extraction defect can be set precisely.
		Fine Matching	Difference can be detected by overlapping and comparing (matching) registered fine images with input images.
		Character Inspect	Recognize character according correlation search with model image registered in [Model Dictionary].
		Date Verification	Reading character string is verified with internal date.
		Model Dictionary	Register character pattern as dictionary. The pattern is used in [Character Inspection].
		2DCode II *1	Recognize 2D code and display where the code quality is poor.
		2DCode *2	Recognize 2D code and display where the code quality is poor.
		Barcode *3	Recognize barcode, verify and output decoded characters.
		OCR	Recognize and read characters in images as character information.
		OCR User Dictionary	Register dictionary data to use for OCR.
		Glue Bead Inspection	You can inspect coating of a specified color for gaps or runoffs along the coating path.
Input Image		Camera Image Input FHV	To input images from cameras. And set up the conditions to input images from cameras. (For FHV only)
		Measurement Image Switching	To switch the images used for measurement. Not input images from camera again.
		Multi-trigger Imaging	The Multi-trigger Imaging processing item captures multiple images at user-defined timings and executes parallel measurement for each image. Insert the Multi-trigger Imaging to the top of the flow.
		Multi-trigger Imaging Task	The Multi-trigger Imaging processing item captures multiple images at user-defined timings and executes parallel measurement for each image. Insert this processing item to the top of the processing which requires imaging for multiple times.
Compensate image		Position Compensation	Used when positions are differed. Correct measurement is performed by correcting position of input images.
		Filtering	Used for processing images input from cameras in order to make them easier to be measured.
		Background Suppression	To enhance contrast of images by extracting color in specified brightness.
		Brightness Correct Filter	Track brightness change of entire screen and remove gradual brightness change such as uneven brightness.
		Color Gray Filter	Color image is converted into monochrome images to emphasize specific color.
		Extract Color Filter	Convert color image to color extracted image or binary image.
		Anti Color Shading	To remove the irregular color/pattern by uniformizing max.2 specified colors.
		Stripes Removal Filter Ⅱ	Remove the background pattern of vertical, horizontal and diagonal stripes.
		Polar Transformation	Rectify the image by polar transformation. Useful for OCR or pattern inspection printed on circle.
		Trapezoidal Correction	Rectify the trapezoidal deformed image.
		Image Subtraction	The registered model image and measurement image are compared and only the different pixels are extracted and converted to an image.
		Advanced filter	Process the images acquired from cameras in order to make them easier to measure. This processing item consolidates existing image conversion filtering into one processing item and adds extra functions.

Group	Icon	Processing Item	
Support measurement		Calculation	Used when using the judge results and measured values of ProcItem which are registered in processing units.
		Line Regression	Used for calculating regression line from plural measurement coodinate.
		Circle Regression	Used for calculating regression circle from plural measurement coordinate.
		Precise Calibration	Used for calibration corresponding to trapezoidal distortion and lens distortion.
		Trend Monitor	Used for displaying the information about results on the monitor, facilitating to avoid NG and analyze causes.
		Image Logging	Used for saving the measurement images to the memory and USB memory.
		Image Conversion Logging	Used for saving the measurement images in JPEG and BMP format.
		Elapsed Time	Used for calculating the elapsed time since the measurement trigger input.
		Wait	Processing is stopped only at the set time. The standby time is set by the unit of [ms].
		Parallelize	A part of the measurement flow is divided into two or more tasks and processed in parallel to shorten the measurement time. This processing item is placed at the top of processing to be performed in parallel.
		Parallelize Task	A part of the measurement flow is divided into two or more tasks and processed in parallel to shorten the measurement time. This processing item is placed immediately before processing to be performed in parallel between Parallelize and Parallelize End.
		Statistics	Used when you need to calculate an average of multiple measurement results.
		Reference Calib Data	Calibration data and distortion compensation data held under other processing items can be referenced.
		Position Data Calculation	The specified position angle is calculated from the measured positions.
		Stage Data	Sets and stores data related to stages.
		Robot Data	Sets and stores data related to robots.
		Vision Master Calibration	This processing item automatically calculates the entire axis movement amount of the control equipment necessary for calibration.
		Convert Position Data	The position angle after the specified axis movement is calculated.
		Movement Single Position	The axis movement that is required to match the measured position angle to the reference position angle is calculated.
		Movement Multi Points	The axis movements that are required to match the measured position angles to the corresponding reference position angles are calculated.
		Camera Calibration	By setting the camera calibration, the measurement result can be converted and output as actual dimensions.
		Scene	The specified scene is copied to the current scene.
		System Information	Obtain system information (e.g., memory and disk space and I/O input signal status) of the Sensor Controller.
Branch		End	This ProcItem must be set up as the last processing unit of a branch.
		Conditional Execution (If)	The measurement flow is divided according to the comparison result obtained using the set expressions and conditions.
		Conditional Execution (Else)	Insert between the Conditional Execution (If) processing item and End If processing item. The measurement flow is divided according to the comparison result obtained using the set expressions and conditions.
		Loop	The set processes are repeated until the loop count reaches the specified number, and then the next process starts.
		Loop Suspension	Insert between the Loop processing item and End Loop processing item. Used to stop the loop before the loop count reaches the specified number.
		Select Execution (Select)	Used to set conditions. The measurement flow is divided according to the comparison result obtained using the conditions given by expressions.
		Select Execution (Case)	Used to make a judgment. The measurement flow is divided according to the comparison result obtained using the conditions given by expressions.
Output result		Result Output (I/O)	Output data to the external devices such as a programmable controller or a PC via PLC Link, Parallel interface, Fieldbus interface (EtherCAT, EtherNet/IP (other than message communication), PROFINET).
		Result Output (Message)	Output data to the external devices such as a programmable controller or a PC with non-procedure mode via the serial interface or EtherNet/IP (message communication). This processing item allows you to save the logging data as a ".csv" file into the Sensor Controller as well.
Display result		Result Display	Used for displaying the texts or the figures in the camera image.
		Display Last NG Image	Display the last NG images.
		Display Image Hold	Processing item to retain images, including measurement results.

*1 2D Codes that can be read : Data Matrix (ECC200)
*2 2D Codes that can be read : Data Matrix (ECC200), QR Code
*3 Bar Codes that can be read : JAN/EAN/UPC (including add-on codes), Code 39, Codabar (NW-7), ITF (Interleaved 2 of 5), Code 93, Code 128, GS1-128, GS1 DataBar (RSS-14 / RSS Limited / RSS Expanded), Pharmacode

Dimensions

(Unit: mm)

Smart Cameras

C Mount Models
FHV7H-□□□□□-C

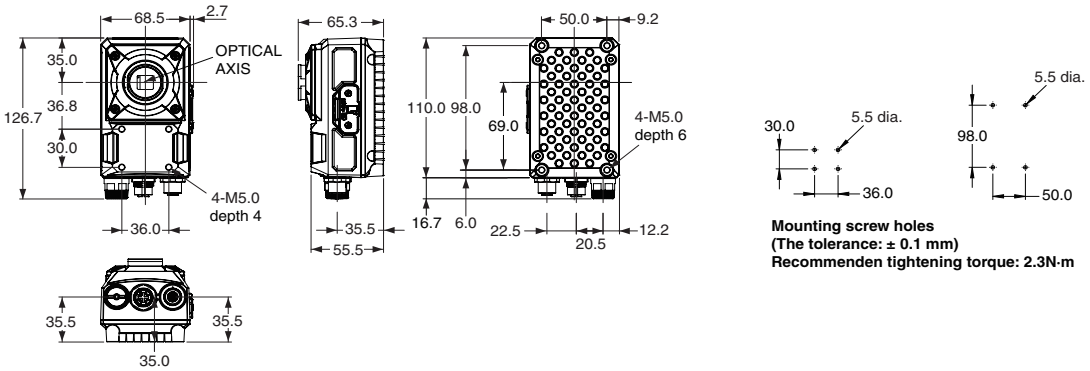

All-in-one Models with Lens Module
FHV7H-□□□□□-S□□

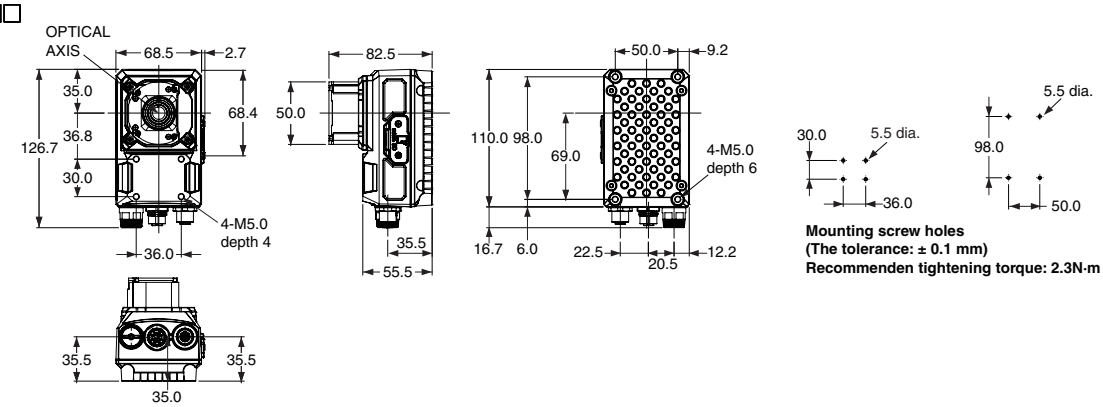

All-in-one Models with Lens and Lighting Modules
FHV7H-□□□□□-S□□-□□

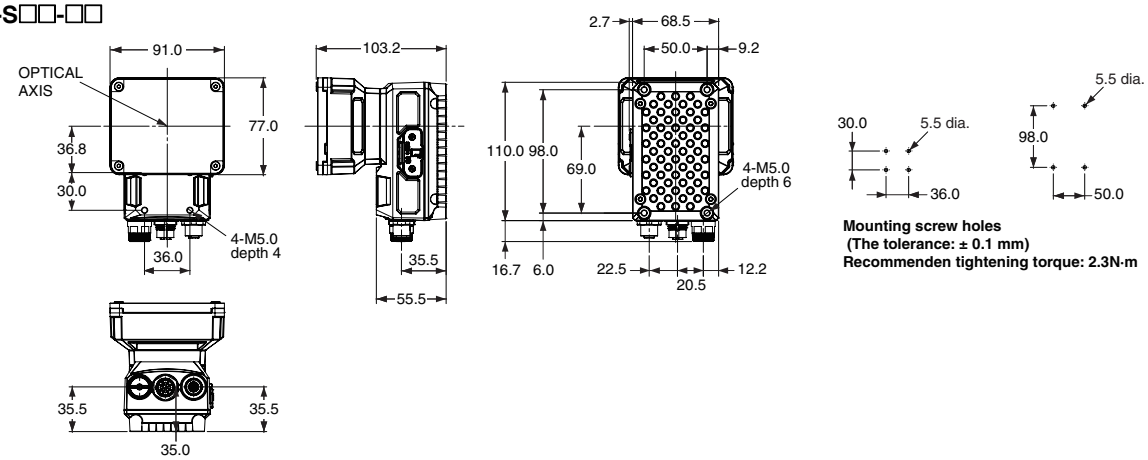

Lens Modules

Autofocus Lens
FHV-LEM-S□□

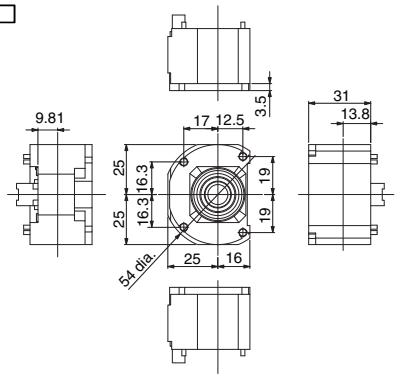

Lighting Modules

FHV-LTM-□□

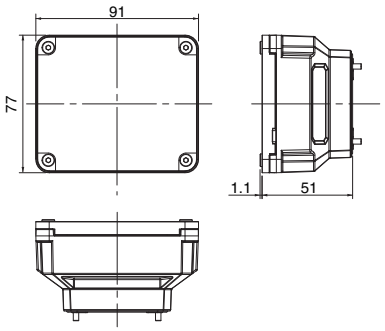

Cables

I/O cable (Straight)
FHV-VDB □M

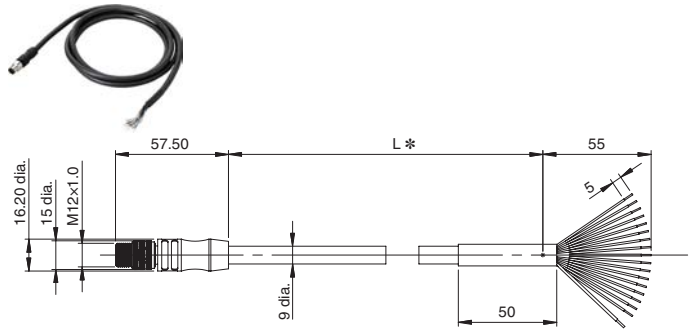

I/O cable (Right angle)
FHV-VDLB □M

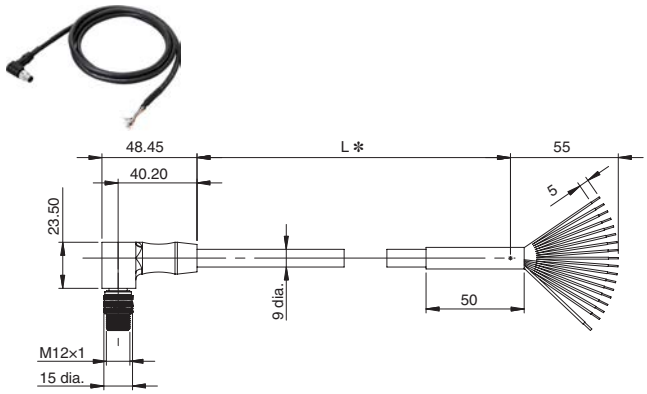

Ethernet cable (Straight)
FHV-VNB □M

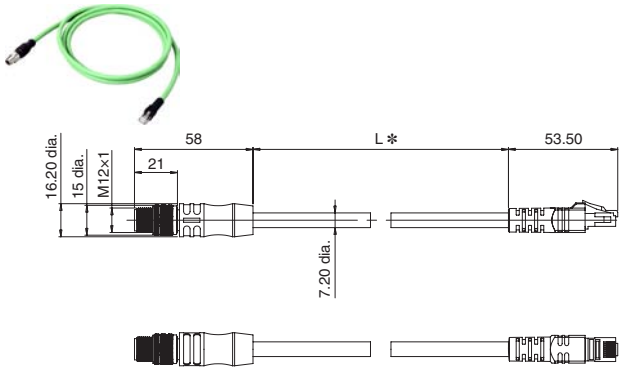

Ethernet cable (Right angle)
FHV-VNLB □M

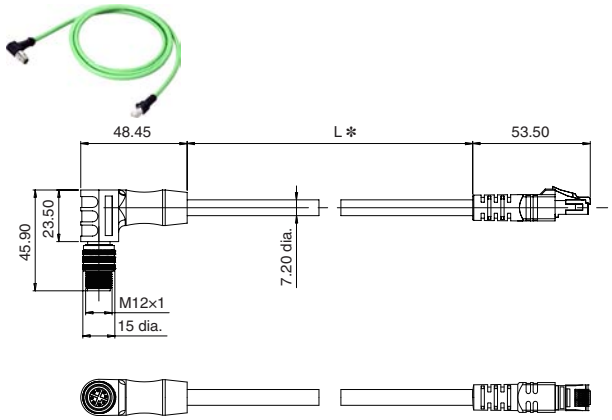

✻ Cable is available in 2m/3m/5m/10m/20m.

Optical Filters

Polarized Light Filter, Diffusion Filter
FHV-XDF/-XPL/-XPL-IR

Light Cover

FHV-XCV

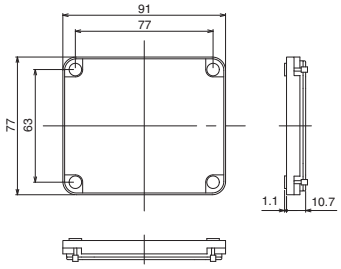

Waterproof Hoods

for C-mount Lens (Short)
FHV-XHD-S

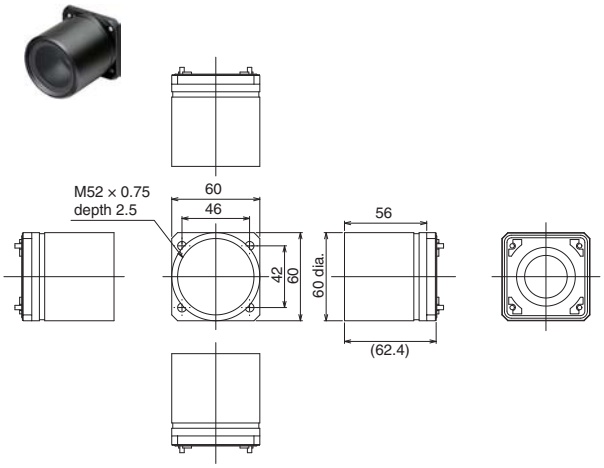

for C-mount Lens (Long)
FHV-XHD-L

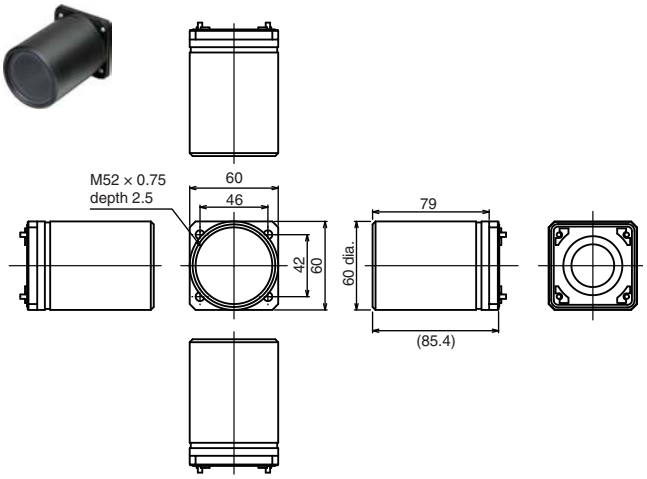

for Lens Modules
FHV-XHD-LEM

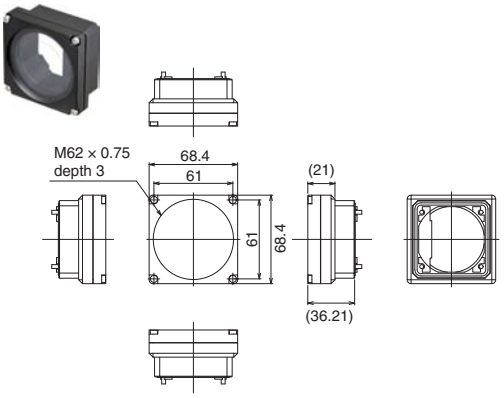

Meaning of Optical Chart

How-to View the Optical Chart

The X axis of the optical chart shows the field of vision (mm).
The Y axis of the optical chart shows the camera installation distance (mm).
The lengths of the fields of view given in the optical charts are the lengths of the Y axis.

All-in-one Models
with Lens Module
FHV7H-□□□□□-S□□

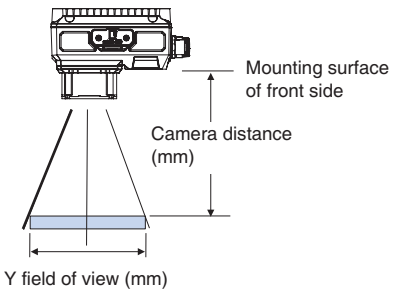

All-in-one Models
with Lens and Lighting Modules
FHV7H-□□□□□-S□□-□□

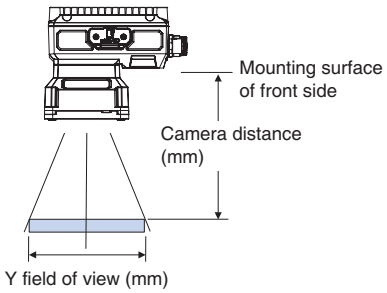

C Mount Models
FHV7H-□□□□□-C

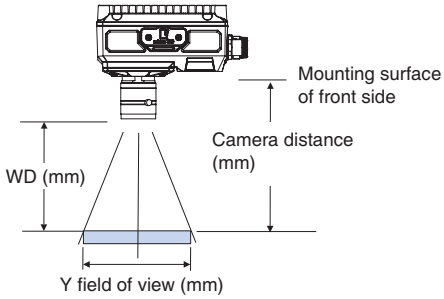

Lens Modules: Autofocus Lens

400,000 pixels
1.6 million pixels
Smart Cameras:
FHV7H-□004, FHV7H-□016
(for Autofocus Lens FHV-LEM-S series)

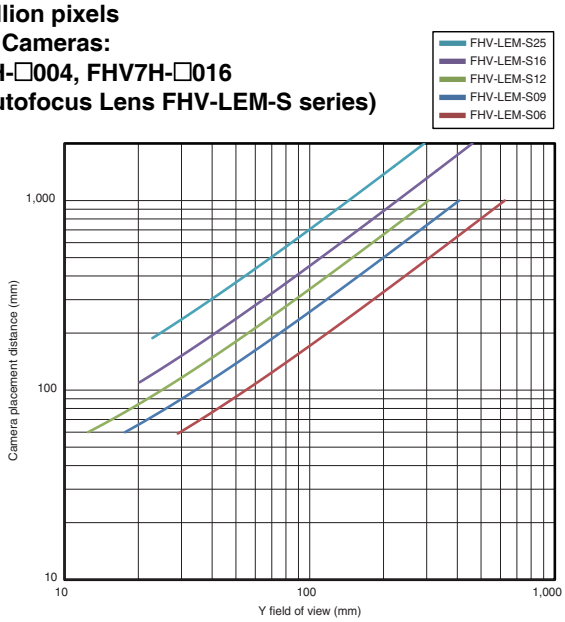

3.2 million pixels
Smart Cameras: FHV7H-□032
(for Autofocus Lens FHV-LEM-S series)

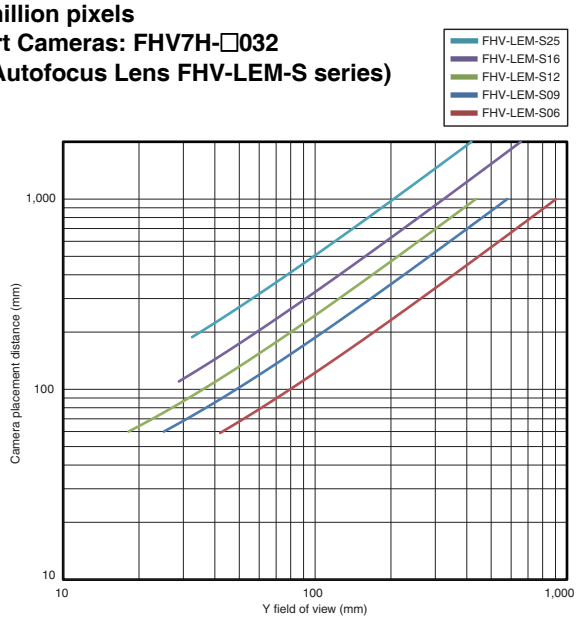

6.3 million pixels
Smart Cameras: FHV7H-□063R
(for Autofocus Lens FHV-LEM-S series)

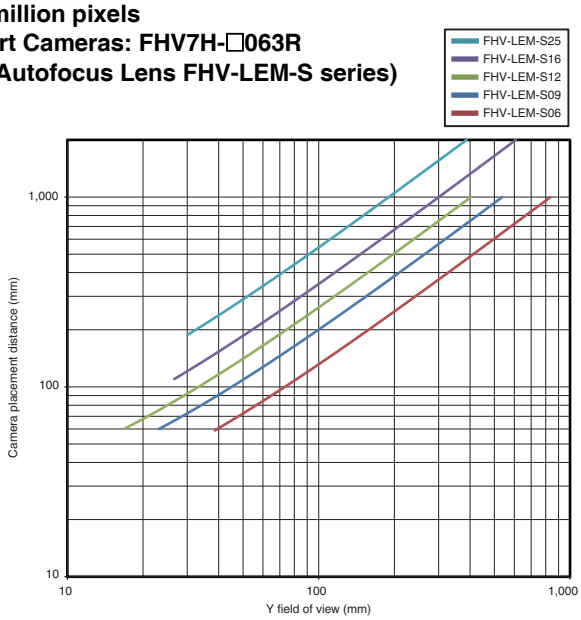

C Mount Lenses: Normal Lenses

400,000 pixels
1.6 million pixels
Smart Cameras:
FHV7H-□004, FHV7H-□016
(for 3Z4S-LE SV-V series)

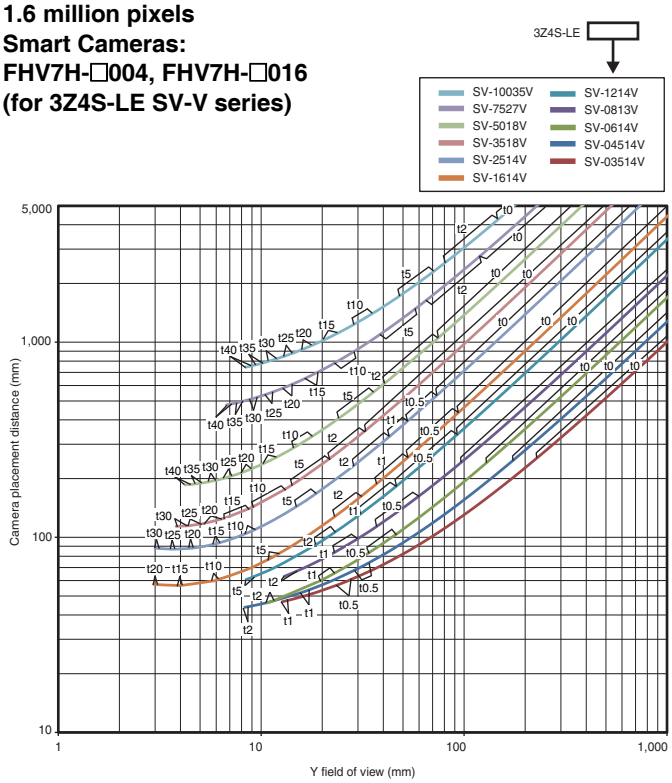

400,000 pixels
1.6 million pixels
Smart Cameras:
FHV7H-□004, FHV7H-□016
(for 3Z4S-LE SV-H series)

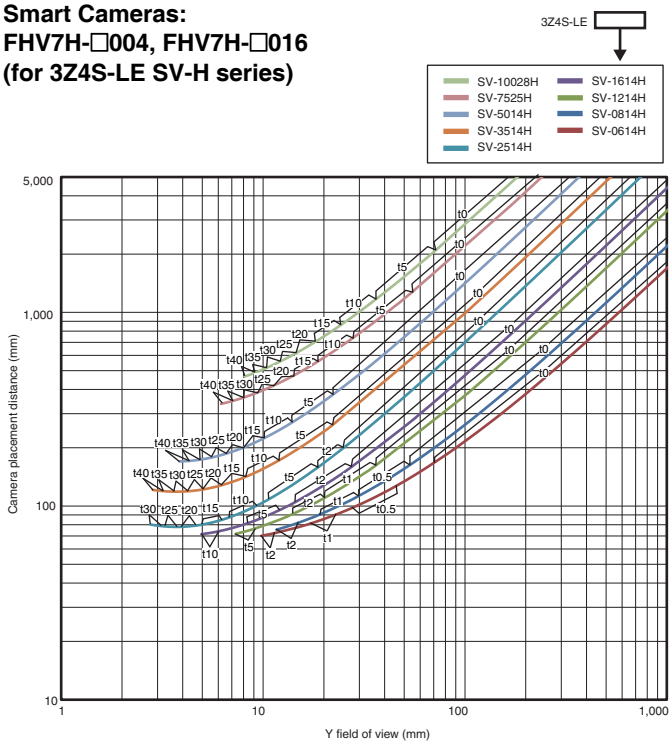

3.2 million pixels
Smart Cameras: FHV7H-□032
(for 3Z4S-LE SV-H series)

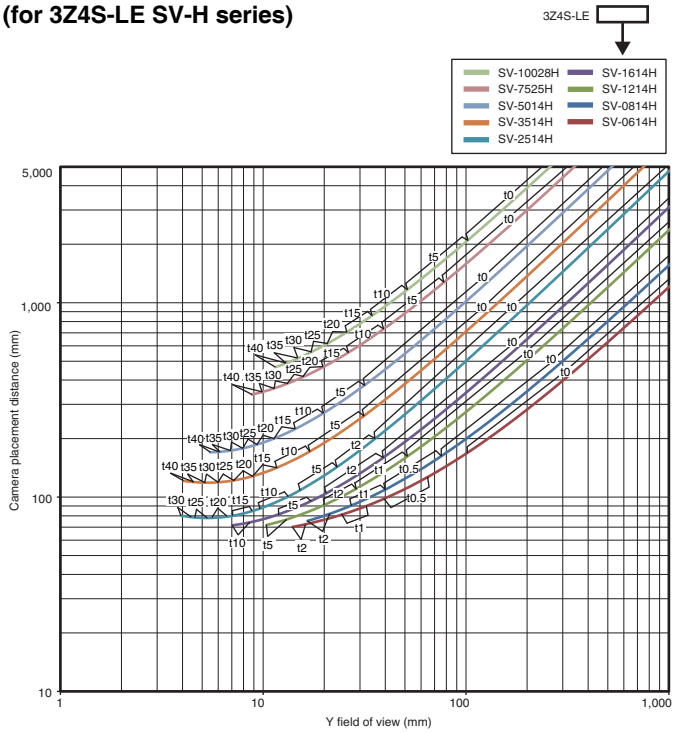

5 million pixels
Smart Cameras: FHV7H-□050
(for 3Z4S-LE SV-H series)

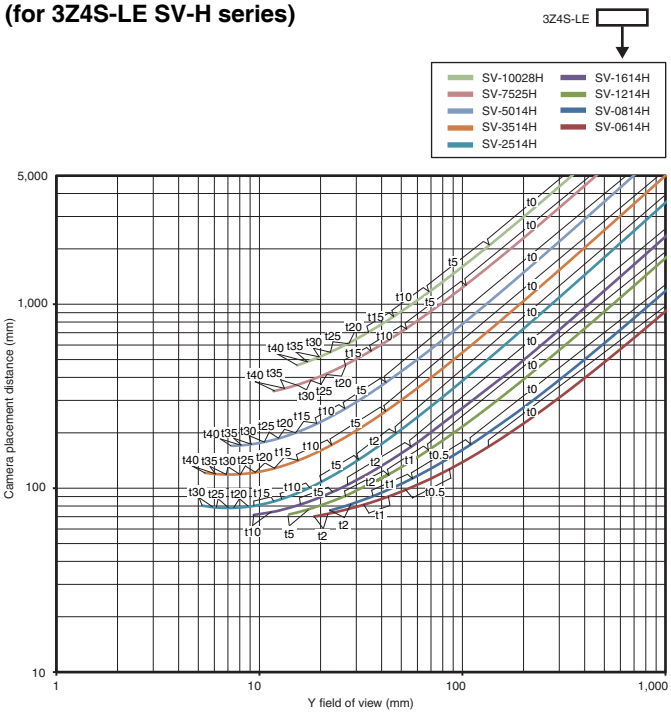

6.3 million pixels
Smart Cameras: FHV7H-□063R
(for 3Z4S-LE SV-H series)

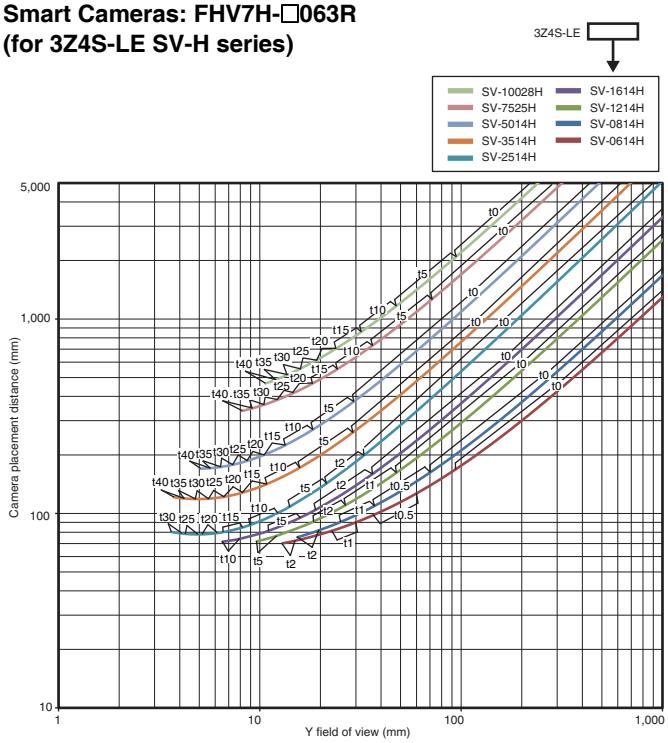

12 million pixels
Smart Cameras: FHV7H-□120R
(for 3Z4S-LE SV-H series)

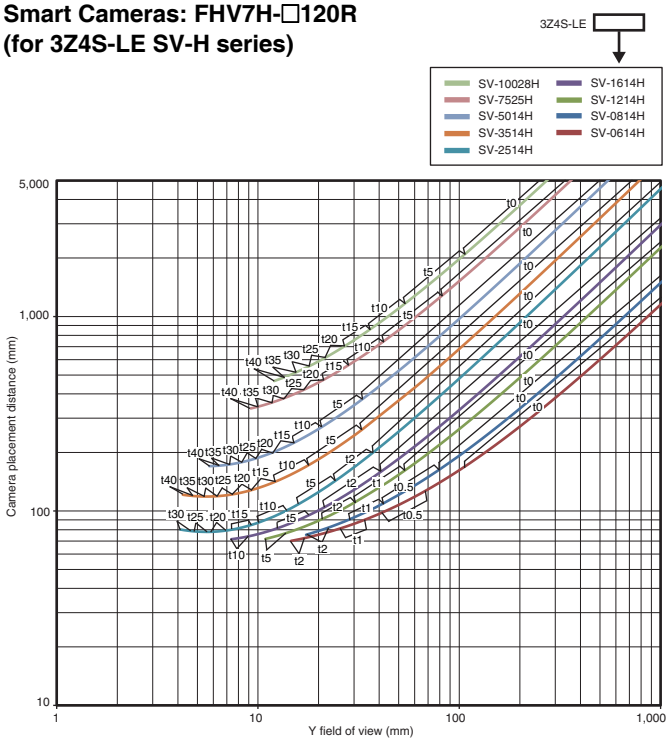

C Mount Lenses: Vibration/Shock-resistance Lens

400,000 pixels
1.6 million pixels
Smart Cameras: FHV7H-□004, FHV7H-□016
(for 3Z4S-LE VS-MCA series)

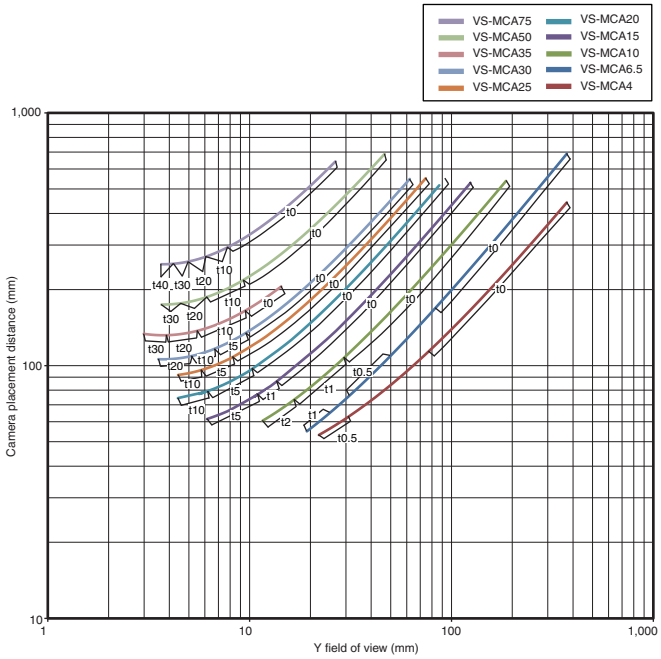

3.2 million pixels
Smart Cameras: FHV7H-□032
(for 3Z4S-LE VS-MCA series)

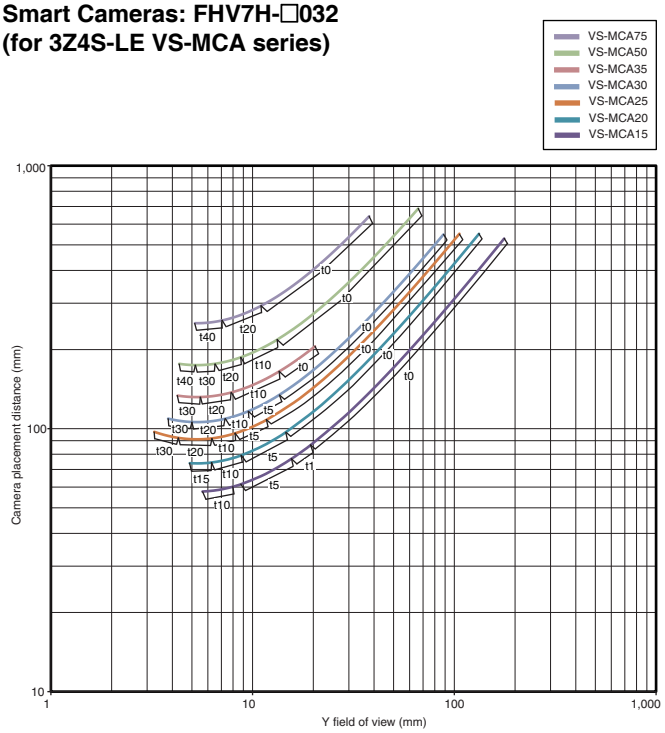

5 million pixels
Smart Cameras: FHV7H-□050
(for 3Z4S-LE VS-MCA series)

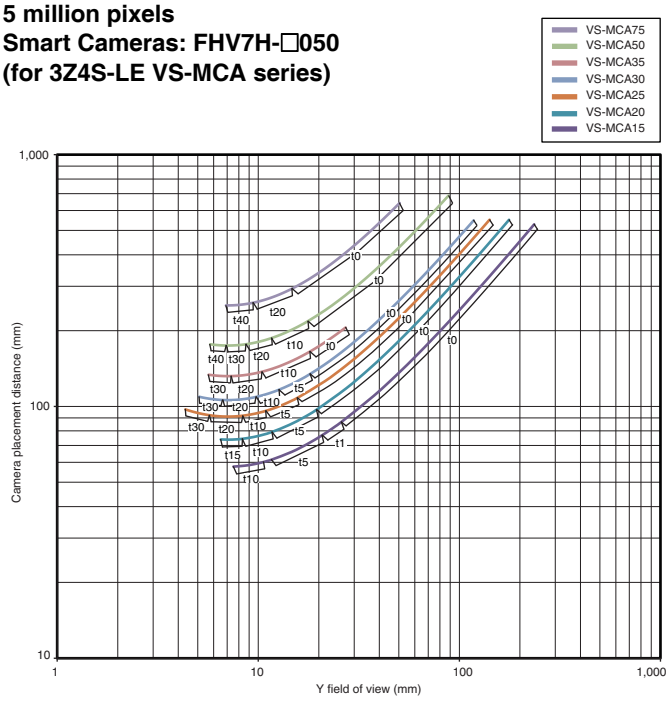

6.3 million pixels
Smart Cameras: FHV7H-□063R
(for 3Z4S-LE VS-MCA series)

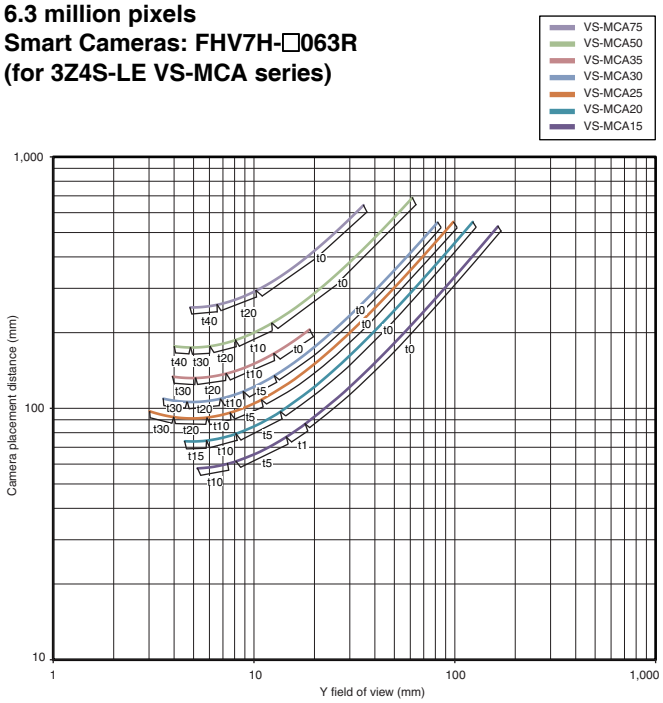

12 million pixels
Smart Cameras: FHV7H-□120R
(for 3Z4S-LE VS-MCA series)

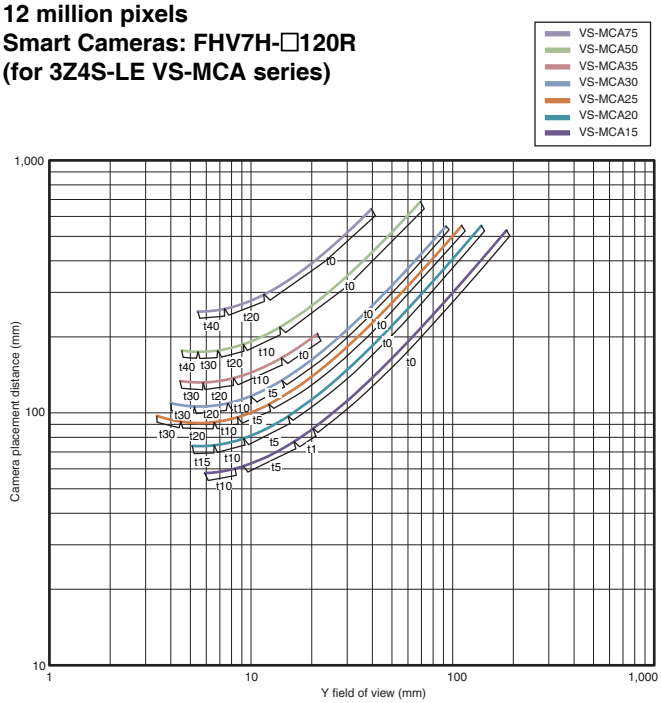

Related Manuals/Catalog

Cat. No.	Series	Manual
Z365	FH/FHV7/FZ5	Vision System FH/FHV/FZ5 Series User's Manual
Z341	FH/FHV7/FZ5	Vision System FH/FHV/FZ5 Series Processing Item Function Reference Manual
Z342	FH/FHV7/FZ5	Vision System FH/FHV/FZ5 Series User's Manual for Communications Settings
Z408	FHV7	Smart Camera FHV Series Setup Manual
Q198	FLV/FL	FLV/FL Vision Accessory CATALOG

Terms and Conditions Agreement

Read and understand this catalog.

Please read and understand this catalog before purchasing the products. Please consult your OMRON representative if you have any questions or comments.

Warranties.

(a) Exclusive Warranty. Omron's exclusive warranty is that the Products will be free from defects in materials and workmanship for a period of twelve months from the date of sale by Omron (or such other period expressed in writing by Omron). Omron disclaims all other warranties, express or implied.

(b) Limitations. OMRON MAKES NO WARRANTY OR REPRESENTATION, EXPRESS OR IMPLIED, ABOUT NON-INFRINGEMENT, MERCHANTABILITY OR FITNESS FOR A PARTICULAR PURPOSE OF THE PRODUCTS. BUYER ACKNOWLEDGES THAT IT ALONE HAS DETERMINED THAT THE PRODUCTS WILL SUITABLY MEET THE REQUIREMENTS OF THEIR INTENDED USE.

Omron further disclaims all warranties and responsibility of any type for claims or expenses based on infringement by the Products or otherwise of any intellectual property right. (c) Buyer Remedy. Omron's sole obligation hereunder shall be, at Omron's election, to (i) replace (in the form originally shipped with Buyer responsible for labor charges for removal or replacement thereof) the non-complying Product, (ii) repair the non-complying Product, or (iii) repay or credit Buyer an amount equal to the purchase price of the non-complying Product; provided that in no event shall Omron be responsible for warranty, repair, indemnity or any other claims or expenses regarding the Products unless Omron's analysis confirms that the Products were properly handled, stored, installed and maintained and not subject to contamination, abuse, misuse or inappropriate modification. Return of any Products by Buyer must be approved in writing by Omron before shipment. Omron Companies shall not be liable for the suitability or unsuitability or the results from the use of Products in combination with any electrical or electronic components, circuits, system assemblies or any other materials or substances or environments. Any advice, recommendations or information given orally or in writing, are not to be construed as an amendment or addition to the above warranty.

See http://www.omron.com/global/ or contact your Omron representative for published information.

Limitation on Liability; Etc.

OMRON COMPANIES SHALL NOT BE LIABLE FOR SPECIAL, INDIRECT, INCIDENTAL, OR CONSEQUENTIAL DAMAGES, LOSS OF PROFITS OR PRODUCTION OR COMMERCIAL LOSS IN ANY WAY CONNECTED WITH THE PRODUCTS, WHETHER SUCH CLAIM IS BASED IN CONTRACT, WARRANTY, NEGLIGENCE OR STRICT LIABILITY.

Further, in no event shall liability of Omron Companies exceed the individual price of the Product on which liability is asserted.

Suitability of Use.

Omron Companies shall not be responsible for conformity with any standards, codes or regulations which apply to the combination of the Product in the Buyer's application or use of the Product. At Buyer's request, Omron will provide applicable third party certification documents identifying ratings and limitations of use which apply to the Product. This information by itself is not sufficient for a complete determination of the suitability of the Product in combination with the end product, machine, system, or other application or use. Buyer shall be solely responsible for determining appropriateness of the particular Product with respect to Buyer's application, product or system. Buyer shall take application responsibility in all cases.

NEVER USE THE PRODUCT FOR AN APPLICATION INVOLVING SERIOUS RISK TO LIFE OR PROPERTY OR IN LARGE QUANTITIES WITHOUT ENSURING THAT THE SYSTEM AS A WHOLE HAS BEEN DESIGNED TO ADDRESS THE RISKS, AND THAT THE OMRON PRODUCT(S) IS PROPERLY RATED AND INSTALLED FOR THE INTENDED USE WITHIN THE OVERALL EQUIPMENT OR SYSTEM.

Programmable Products.

Omron Companies shall not be responsible for the user's programming of a programmable Product, or any consequence thereof.

Performance Data.

Data presented in Omron Company websites, catalogs and other materials is provided as a guide for the user in determining suitability and does not constitute a warranty. It may represent the result of Omron's test conditions, and the user must correlate it to actual application requirements. Actual performance is subject to the Omron's Warranty and Limitations of Liability.

Change in Specifications.

Product specifications and accessories may be changed at any time based on improvements and other reasons. It is our practice to change part numbers when published ratings or features are changed, or when significant construction changes are made. However, some specifications of the Product may be changed without any notice. When in doubt, special part numbers may be assigned to fix or establish key specifications for your application. Please consult with your Omron's representative at any time to confirm actual specifications of purchased Product.

Errors and Omissions.

Information presented by Omron Companies has been checked and is believed to be accurate; however, no responsibility is assumed for clerical, typographical or proofreading errors or omissions.

Note: Do not use this document to operate the Unit.

OMRON Corporation **Industrial Automation Company**
Kyoto, JAPAN
Contact: www.ia.omron.com

Regional Headquarters
OMRON EUROPE B.V.
Wegalaan 67-69, 2132 JD Hoofddorp
The Netherlands
Tel: (31)2356-81-300/Fax: (31)2356-81-388

OMRON ELECTRONICS LLC
2895 Greenspoint Parkway, Suite 200
Hoffman Estates, IL 60169 U.S.A.
Tel: (1) 847-843-7900/Fax: (1) 847-843-7787

OMRON ASIA PACIFIC PTE. LTD.
No. 438A Alexandra Road # 05-05/08 (Lobby 2),
Alexandra Technopark,
Singapore 119967
Tel: (65) 6835-3011/Fax: (65) 6835-2711

OMRON (CHINA) CO., LTD.
Room 2211, Bank of China Tower,
200 Yin Cheng Zhong Road,
PuDong New Area, Shanghai, 200120, China
Tel: (86) 21-5037-2222/Fax: (86) 21-5037-2200

Authorized Distributor:

Cat. No. Q264-E1-02 0119 (1118)